ISO9001 CE LISTED APPROVED

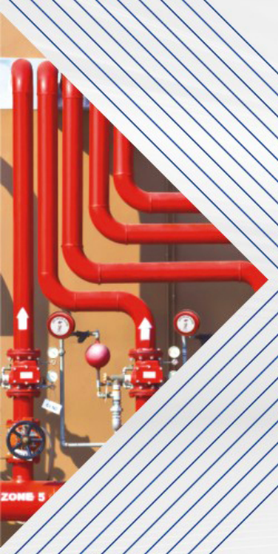

WEIZIDOM

WEIZIDOM GROUP

集 团 总 部：中国・郑州华南城中原电商大厦
分　工　厂：天津・安徽・山东・连云港・温州
驻外分公司：非洲・坦桑尼亚・赞比亚・肯尼亚

Group headquarters: Central Plains E-Commerce Buliding, Zhengzhou South City, China
Branch Factory: Tianjin, Anhui, Shandong, Lianyungang, Wenzhou
Branch Company in Overseas: Tanzania, Zambia, Kenya in Africa

销 售 热 线：+86-13849013722

Sales Hotline: +86-13849013722

www.wsdsolution.com
www.wsdvalves.com

info@wsdvalve.com
weisidun@hawsd.com

www.facebook.com/hawsd

www.linkedin.com/company/henan-wesdom

WEIZIDOM

Fire Protection Series

WEIZIDOM GROUP

WEIZIDOM GROUP
Enterprise Social Responsibility

WEIZIDOM are not only concerned about products, services and solutions.

WEIZIDOM promise to implement sustainable development and benefit society with energy-saving and environmental protection.

Our Purpose: People-Oriented, Hard Work, Never forget the original intention, Innovation and forge ahead.

Our Mission: To be a high-quality supplier of fluid control systems and plan maker; To contribute our wisdom and strength to the development of the cutting-edge technology of fluid control systems.

Our Vision: Explore the internal innovation spirit and creativity, pursuit, innovation and continuous improvement. Use wisdom, foresight and hard work to make "WEIZIDOM" a world-renowned brand; Make the group company grow into a respectable "Four Satisfaction" enterprise.

Customer Satisfaction: Use high-quality products and refined services to add value to customers.

Employee Satisfaction: People-oriented, build a platform for all employees to realize their dreams, everyone is the CEO.

Partner Satisfaction: Mutual promotion, improve, mutual benefit and win-win.

Shareholder Satisfaction: Enable the company to develop and grow, and return profits.

Our Values: Create differentiated value-added services for customers, let everyone in the company has a sense of accomplishment.

WEIZIDOM GROUP
Development History

2010
WEIZIDOM was established

2015
WEIZIDOM established the first overseas branch

2016
WEIZIDOM products are exported to overseas regions and markets

In December 2010, WESDOM was registered with a registered capital of 5 million yuan;

June 2013,WESDOM passed ISO and other international certifications;

In June 2014, TIANJIN WESDOM VALVE MANUFACTURING CO.,LTD. was established in Tianjin, where the production of butterfly valves is concentrated;

In July 2015, the first overseas branch company WEISIDUN MATERIAL SOLUTION COMPANY was established in the beautiful African continent –Tanzania, and WESDOM began to expand into the international market;

In December 2015, WESDOM established a special foreign trade import and export company in Zhengzhou, the hinterland of the Central Plains HENAN WEISIDUN IMPORT AND EXPORT TRADE CO.,LTD.,to make up for the domestic shortcomings of entering the international market;

In 2016, WESDOM brand products have been exported to Tanzania, Zambia, Egypt, Turkey, Pakistan, Thailand, Indonesia, Vietnam, the Philippines, Saudi Arabia, Mexico and other countries and regions;

In 2017, the company carried out production, procurement adjustments and layouts, expanded product series, initially formed a production and procurement system for water series products (control and connection systems), and established a procurement system for major production clusters across the south and north. ;

2018
Zambia branch was established, and the group company expanded its measurement products series

2019
WESDOM launched a series of plastic materials

2020
WESDOM sales exceeded 20 million USD

2021
Kenya branch is established, WESDOM products occupy the African market

.....

In January 2018, the second exclusive import and export company was established–HENAN WESDOM FLOW CONTROL CO.,LTD.In August of the same year, the second overseas branch company –WESDOM VALVES AND FITTINGS COMPANY LIMITED was established in Zambia, Africa;

In 2018, the series of measurement products (water meters, flow meters) were expanded, and the supply chain system was further enriched and improved;

In 2019, a series of plastic material products were launched; the company's valves and pipe fittings passed the CE certification; WESDOM overall sales performance exceeded 90 million in the same year;

In 2020, under the influence of the unfavorable factors of the domestic and foreign epidemic situation, the company has achieved the goal of breaking 100 million yuan in addition to the continuous growth of sales.

In April 2021, the Kenya branch WESDOM VALVES AND FITTINGS(K) CO LIMITED was established and operated well, its products occupy the African market successfully.

To be continued...

WEIZIDOM GROUP
Company Introduction

WEIZIDOM Group specializes in pipeline fluid systems: R&D, production and sales of valves, pipe fittings, water meters, flow meters, etc. The products cover cast iron, cast steel, stainless steel, copper, plastic and other materials, which are widely used in hydropower stations, heat, buildings, Water supply and drainage, petroleum, chemical industry, electric power, medical and other fields.

In recent years, WEIZIDOM Group has actively embraced the era of Internet of Everything, committed to IoT terminal control and artificial intelligence design, big data mining and development, and promoted smart hardware to move towards big data center and wisdom with excellent market foresight and technological innovation. The smart cities, smart heating, smart water and other fields are in progress.

In the early stage, the Internet of Things smart valves and smart water meters were developed to promote and apply smart control systems such as municipal heating and municipal water supply.

In terms of quality control, we have strict control procedures. From the raw materials entering the factory to the final product leaving the factory, after 24 quality inspection passes, each pass must ensure that the product quality is 100% qualified before it can flow into the next process, thus ensuring that the qualified rate of the finished products. WEIZIDOM products can well meet the Chinese standard like GB, JB, HB; American standard like API, ASME, AWWA; British and EU standards like BS, EN, ISO; German standard DIN; Japanese standard JIS; Russian standard GOST and other standards.

Quality Inspection

WEIZIDOM Group attaches great importance to product quality, we have the independent laboratory, advanced technology research, sophisticated testing equipment, and a professional technical team. The fire fighting protection series products are produced by real–time analysis and strict physical and chemical testing to control the product quality effectively. We ensure the quality reliability from raw material to finished products when leaving the factory. The castings has passed PT, RT flaw detection and mechanical performance test, the parts have been tested by spectrum, hardness, tensile, etc., and the quality of parts is strictly controlled, the finished products have passed the whole process performance test such as strength and sealing, and the quality of the finished product is strictly controlled.

Each WEIZIDOM product quality is totally ensured, and we well received good reputation from our clients all over the world.

Product testing Category:

- Grooved Steel Pipe
- Galvanized Pipe Fittings
- Groove Pipe Fitting
- Fire Fighting Valve
- Fire Control Series
- Fire Sprinkler

WEIZIDOM GROUP

Company Qualification

Company Qualification

WEIZIDOM

WEIZIDOM GROUP

Show Cases

Fire fighting pipes for Colombia bulding project

- Customer Name: Contractor in Colombia
- Main purchasing products: UL/FM Pipes
- Projects Pictures: As followings
- Projects Details: The customer is one of the contractors for installing fire fighting projects. WEIZIDOM team has sent products pics, workshop pics and other fire fighting cases pictures, the client compare the prices from different suppliers and finally choose us, even our price is not the cheapest. We met in Colombia and client told us that WEIZIDOM team is professional and have excellent service. They will purchase valves, pipe fittings from us soon, believe we will have long term cooperation.

Fire protection project in Ho Chi Minh City, Vietnam

- Provide the valves and pipe fittings required for the overall project, and assist customers to efficiently complete the project construction with guaranteed time, quality and quantity
- Products: API Gate Valve, Check Valve, Globe Valve, Strainer.

Fire fighting system in Nigeria

- The high quality gate valves with UL FM certification is recognized by our clients!

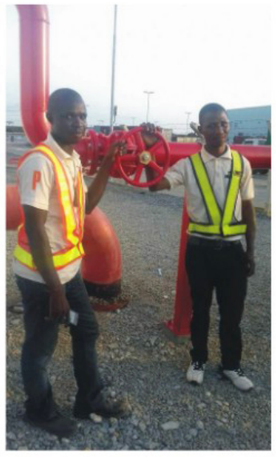

Show Cases

The fire fighting products used in Zambia

Building project

We supplied the grooved gate valve,check valve, Y strainer and butterfly valve.

The end user is very satisfied with our products quality, now we have continuous cooperations with the contractor.

Fire fighting products for Philippines client

Cement factory

Including check valve, butterfly valve, gate valve and fittings, we do supply the one-stop service with high quality products.

Fire fighting accessories used in Kenya

We have the ability to supply the products for whole fire fighting system, Our aim is to solve the problems for our clients.

Contents

Grooved Steel Pipe

ASTM A795 Black and Red and Hot Dipped Zinc–Coated, Welded Steel Pipe for Fire Protection Use

Dimensions, Weights, and Test Pressure For Light-Weight Fire Protection Pipe-Schedule 10 A									
NPS Designator	DN Designator	Outside Diameter		Wall Thickness		Weight Plain End		Test Pressure Seamless and Electric-Resistance-Welded	
		in	mm	in	mm	lb/ft	kg/m	psi	MPa
3/4	20	1.05	26.7	0.083	2.11	0.86	1.28	700	4.8
1	25	1.315	33.4	0.109	2.77	1.41	2.09	700	4.8
1 1/4	32	1.66	42.2	0.109	2.77	1.81	2.69	1000	6.9
1 1/2	40	1.9	48.3	0.109	2.77	2.09	3.11	1000	6.9
2	50	2.375	60.3	0.109	2.77	2.64	3.93	1000	6.9
2 1/2	65	2.875	73	0.12	3.05	3.53	5.26	1000	6.9
3	80	3.5	88.9	0.12	3.05	4.34	6.46	1000	6.9
3 1/2	90	4	101.6	0.12	3.05	4.98	7.41	1200	8.3
4	100	4.5	114.3	0.12	3.05	5.62	8.37	1200	8.3
5	125	5.563	141.3	0.134	3.4	7.78	11.58	1200	8.3
6	150	6.625	168.3	0.134	3.4	9.3	13.85	1000	6.9
8	200	8.625	219.1	0.188	4.78	16.96	25.26	800	5.5
10	250	10.75	273.1	0.188	4.78	21.23	31.62	700	4.8

Dimensions, Weights, Test Pressures For Standard-Weight Fire Protection Pipe-Schedule 30 and Schedule 40									
NPS Designator	DN Designator	Outside Diameter		Wall Thickness		Weight Plain End		Test Pressure Seamless and Electric-Resistance-Welded	
		in	mm	in	mm	lb/ft	kg/m	psi	MPa
1/2	15	0.84	21.3	0.109	2.77	0.85	1.27	700	4.8
3/4	20	1.05	26.7	0.113	2.87	1.13	1.68	700	4.8
1	25	1.315	33.4	0.133	3.38	1.68	2.5	700	4.8
1 1/4	32	1.66	42.2	0.14	3.58	2.27	3.4	1000	6.9
1 1/2	40	1.9	48.3	0.145	3.68	2.72	4.07	1000	6.9
2	50	2.375	60.3	0.154	3.91	3.66	5.5	1000	6.9
2 1/2	65	2.875	73	0.203	5.16	5.8	8.68	1000	6.9
3	80	3.5	88.9	0.216	5.49	7.58	11.35	1000	6.9
3 1/2	90	4	101.6	0.226	5.74	9.12	13.71	1200	8.3
4	100	4.5	114.3	0.237	6.02	10.8	16.25	1200	8.3
5	125	5.563	141.3	0.258	6.55	14.63	22.07	1200	8.3
6	150	6.625	168.3	0.28	7.11	18.99	28.6	1200	8.3
8	200	8.625	219.1	0.277	7.04	24.72	38.09	1200	8.3
10	250	10.75	273.1	0.307	7.8	34.27	53.29	1000	6.9

Note 1.1psi=0.07031kg/cm^2 2.1lb/ft=0.45359kg/ft

Galvanized Pipe Fittings

JIANZHI & HITHERTOP





适用于额定工作压力(1.6MPa)和工作温度(200℃)范围内，输送液体如：水，油，气(天然气、煤气、水蒸气)等一般管路的连接。

表面处理：涂漆、喷涂、热镀锌、电镀锌

Suitable for pressure Max 1.6MPa, temperature Max 200℃, and for pipeline holding water, oil, gas, etc.

Finishing: (Black) Painting, Galvanizing, Elctro-plating

执行标准

企业标准 Q/JZ 01-2009(修改采用日本标准JIS B2301)
国家标准 GB/T 3287-2000
国际标准 ISO5922/ISO46/ISO7-1
英国欧盟标准 BS EN1562:1997
德国标准 DIN2950/1692/2999
美国标准 ANSI/ASTM A 197/A 197M-2000
ANSI/ASTM 16.3-92/B1.20.1-83

Standards

Company Standard:Q/JZ 01-2009(Partially based on JIS B2301)
GB/T 3287-2000
ISO5922/ISO46/ISO7-1
BS EN1562:1997
DIN2950/1692/2999
ANSI/ASTM A 197/A 197M-2000
ANSI/ASTM 16.3-92/B1.20.1-83

材料机械性能

抗拉强度≥330MPa； 伸长率≥8%； 硬度≤HB150

Mechanical Properties

Tensile Strength ≥330MPa; Elongation rate ≥8%; Hardnedss ≤HB150











Fig.90


Fig.92


Fig.90R


Fig.120


Fig.1


Fig.2


Fig.40


Fig.41


Fig.220


Fig.270


Fig.240


Fig.529a


Fig.280


Fig.245


Fig. 130


Fig.131R


Fig.165


Fig.180


Fig.180R


Fig.330


Fig.331


Fig.340


Fig.341

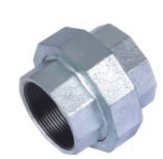
Fig.342


Fig.95


Fig.97

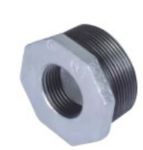
Fig.241


Fig.290

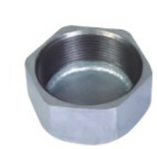
Fig.300

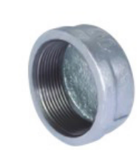
Fig.301

Fig.90

90° Elbow, Equal



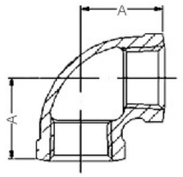

Code	Size		A	Unit Weight		Packing
				Black	Galv.	Carton
	NPS	DN	mm	g	g	Pcs/ctn
JZ9006	1/8"	6	18	30.38	31	600
JZ9008	1/4"	8	20	42.14	43	600
JZ9010	3/8"	10	24	60.76	62	500
JZ9015	1/2"	15	27	96.04	98	400
JZ9020	3/4"	20	32	139.16	142	210
JZ9025	1"	25	37	213.64	218	120
JZ9032	1 1/4"	32	44.5	340.06	347	64
JZ9040	1 1/2"	40	48.5	423.36	432	48
JZ9050	2"	50	57	674.24	688	32
JZ9065	2 1/2"	65	68.5	1068.2	1090	16
JZ9080	3"	80	77.5	1489.6	1520	10
JZ90100	4"	100	96.5	2700.88	2756	6
JZ90150	6"	150	129	6089.72	6214	2

Fig.92

90° M&F Elbow, Equal



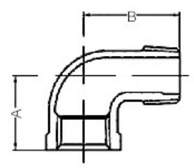

Code	Size		A	B	Unit Weight		Packing
					Black	Galv.	Carton
	NPS	DN	mm	mm	g	g	Pcs/ctn
JZ9208	1/4"	8	20	28	37.24	38	600
JZ9210	3/8"	10	25	33	54.88	56	500
JZ9215	1/2"	15	28	38	87.22	89	300
JZ9220	3/4"	20	33	44	132.3	135	180
JZ9225	1"	25	38	52	204.82	209	104
JZ9232	1 1/4"	32	45	60	339.08	346	60
JZ9240	1 1/2"	40	50	65	434.14	443	52
JZ9250	2"	50	58	74	701.68	716	26
JZ9265	2 1/2"	65	69	90	1125.04	1148	12
JZ9280	3"	80	77.5	100	1547.42	1579	10
JZ92100	4"	100	96.5	120	2703.82	2759	6

Fig.90R

90° Degree Elbow, Reducing



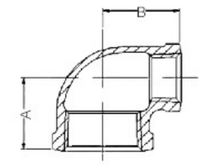

Code	Size		A	B	Unit Weight		Packing
					Black	Galv.	Carton
	NPS	DN	mm	mm	g	g	Pcs/ctn
JZ90R1510	1/2" × 3/8"	15 × 10	25	25	74.48	76	270
JZ90R2015	3/4" × 1/2"	20 × 15	29	30	122.5	125	270
JZ90R2510	1" × 3/8"	25 × 10	29	31	143.08	146	160
JZ90R2515	1" × 1/2"	25 × 15	31	33	161.7	165	160
JZ90R2520	1" × 3/4"	25 × 20	34	35	184.24	188	160
JZ90R3210	1 1/4" × 1/2"	32 × 10	31	36	213.64	218	100
JZ90R3215	1 1/4" × 1/2"	32 × 15	34	37	227.36	232	100
JZ90R3220	1 1/4" × 3/4"	32 × 20	36	40	252.84	258	100
JZ90R3225	1 1/4" × 1"	32 × 25	40	41	285.18	291	90
JZ90R4015	1 1/2" × 1/2"	40 × 15	35	41	266.56	272	90
JZ90R4020	1 1/2" × 3/4"	40 × 20	37	43	302.82	309	90
JZ90R4025	1 1/2" × 1"	40 × 25	41	45	342.02	349	70
JZ90R4032	1 1/2" × 1 1/4"	40 × 32	45	47	400.82	409	56
JZ90R5015	2" × 1/2"	50 × 15	37	47	398.86	407	68
JZ90R5020	2" × 3/4"	50 × 20	40	49	423.36	432	52
JZ90R5025	2" × 1"	50 × 25	43	51	476.28	486	50
JZ90R5032	2" × 1 1/4"	50 × 32	47	53	552.72	564	40
JZ90R5040	2" × 1 1/2"	50 × 40	51	54	588	600	30
JZ90R6515	2 1/2" × 1/2"	65 × 15	40.5	56	579.18	591	46
JZ90R6520	2 1/2" × 3/4"	65 × 20	43.5	57	613.48	626	40
JZ90R6525	2 1/2" × 1"	65 × 25	47.5	59	686	700	34
JZ90R6532	2 1/2" × 1 1/4"	65 × 32	51.5	61	732.06	747	30
JZ90R6540	2 1/2" × 1 1/2"	65 × 40	54.5	61	772.24	788	26
JZ90R6550	2 1/2" × 2"	65 × 50	59.5	64	904.54	923	24
JZ90R8015	3" × 1/2"	80 × 15	42.5	64	735.98	751	36
JZ90R8020	3" × 3/4"	80 × 20	45.5	65	770.28	786	30
JZ90R8025	3" × 1"	80 × 25	49.5	67	830.06	847	20
JZ90R8032	3" × 1 1/4"	80 × 32	54.5	69	931.98	951	20
JZ90R8040	3" × 1 1/2"	80 × 40	57.5	71	952.56	972	20
JZ90R8050	3" × 2"	80 × 50	61.5	71	1166.2	1190	12
JZ90R8065	3" × 2 1/2"	80 × 65	71.5	74	1319.08	1346	12
JZ90R10015	4" × 1/2"	100 × 15	49.5	78	1311.24	1338	14
JZ90R10020	4" × 3/4"	100 × 20	53.5	79	1326.92	1354	14
JZ90R10025	4" × 1"	100 × 25	56.5	82	1405.32	1434	14
JZ90R10032	4" × 1 1/4"	100 × 32	60.5	85	1550.36	1582	14
JZ90R10040	4" × 1 1/2"	100 × 40	62.5	85	1621.9	1655	10
JZ90R10050	4" × 2"	100 × 50	68.5	86	1711.08	1746	10
JZ90R10065	4" × 2 1/2"	100 × 65	77.5	89	1957.06	1997	8
JZ90R10080	4" × 3"	100 × 80	82.5	90	2164.82	2209	8

Fig.120

45° Elbow



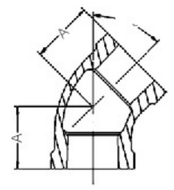

Code	Size		A	B	Unit Weight		Packing
					Black	Galv.	Carton
	NPS	DN	mm	mm	g	g	Pcs/ctn
JZ9208	1/4"	8	20	28	37.24	38	600
JZ9210	3/8"	10	25	33	54.88	56	500
JZ9215	1/2"	15	28	38	87.22	89	300
JZ9220	3/4"	20	33	44	132.3	135	180
JZ9225	1"	25	38	52	204.82	209	104
JZ9232	1 1/4"	32	45	60	339.08	346	60
JZ9240	1 1/2"	40	50	65	434.14	443	52
JZ9250	2"	50	58	74	701.68	716	26
JZ9265	2 1/2"	65	69	90	1125.04	1148	12
JZ9280	3"	80	77.5	100	1547.42	1579	10
JZ92100	4"	100	96.5	120	2703.82	2759	6

Fig.1

90 Degree M&F Long Sweep Bends



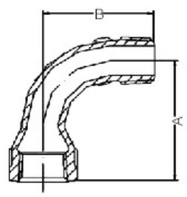

Code	Size		A	B	Unit Weight		Packing
					Black	Galv.	Carton
	NPS	DN	mm	mm	g	g	Pcs/ctn
JZ110	3/8"	10	48	42	71.54	73	400
J2115	1/2"	15	55	48	115.64	118	280
JZ120	3/4"	20	69	60	187.18	191	150
JZ125	1"	25	85	75	304.78	311	80
JZ132	1 1/4"	32	105	95	519.4	530	50
JZ140	1 1/2"	40	116	105	665.42	679	24
JZ150	2"	50	140	130	1123.08	1146	12
JZ165	2 1/2"	65	176	165	2067.8	2110	8
JZ180	3"	80	205	190	2955.68	3016	6
JZ1100	4"	100	96.5	120	5396.86	5507	2

Fig.2

90 Degree Female Long Sweep Bends



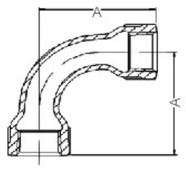

Code	Size		A	Unit Weight		Packing
				Black	Galv.	Carton
	NPS	DN	mm	g	g	Pcs/ctn
JZ210	3/8"	10	48	87.22	89	400
JZ215	1/2"	15	55	142.1	145	220
JZ220	3/4"	20	69	223.44	228	120
JZ225	1"	25	85	372.4	380	70
JZ232	1 1/4"	32	105	607.6	620	40
JZ240	1 1/2"	40	116	807.52	824	20
JZ250	2"	50	140	1268.12	1294	12
JZ265	2 1/2"	65	176	2243.22	2289	8
JZ280	3"	80	205	3234	3300	6
JZ2100	4"	100	260	6056.4	6180	2

Fig.40

45 Degree M&F Long Sweep Bends


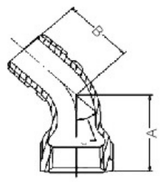

Code	Size		A	B	Unit Weight		Packing
					Black	Galv.	Carton
	NPS	DN	mm	mm	g	g	Pcs/ctn
JZ4015	1/2"	15	36	30	87	88	180
JZ4020	3/4"	20	43	36	88	144	160
JZ4025	1"	25	51	42	89	224	80
JZ4032	1 1/4"	32	64	54	90	362	50
JZ4040	1 1/2"	40	68	58	91	450	24
JZ4050	2"	50	81	70	92	752	12
JZ4065	2 1/2"	65	99	86	93	1344	8
JZ4080	3"	80	113	100	94	1963	6
JZ40100	4"	100	143	126			2

Fig.41

45 Degree Female Long Sweep Bends

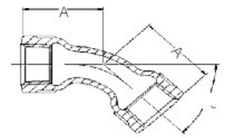

Code	Size		A	Unit Weight		Packing
				Black	Galv.	Carton
	NPS	DN	mm	g	g	Pcs/ctn
JZ4115	1/2"	15	36	119.56	122	180
JZ4120	3/4"	20	43	180.32	184	160
JZ4125	1"	25	51	286.16	292	80
JZ4132	1 1/4"	32	64	461.58	471	50
JZ4140	1 1/2"	40	68			24
JZ4150	2"	50	81			12
JZ4165	2 1/2"	65	99			8
JZ4180	3"	80	113			6
JZ41100	4"	100	142			2

Fig.220

Part Thread Sockets

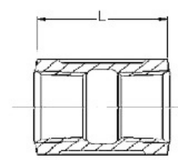

Code	Size		L	Unit Weight		Packing
				Black	Galv.	Carton
	NPS	DN	mm	g	g	Pcs/ctn
JZ22006	1/8"	6	23.5	/	/	/
JZ22008	1/4"	8	26	36.26	37	800
JZ22010	3/8"	10	29	46.06	47	700
JZ22015	1/2"	15	35	80.36	82	450
JZ22020	3/4"	20	38	113.68	116	300
JZ22025	1"	25	44	176.4	180	180
JZ22032	1 1/4"	32	49	264.6	270	120
JZ22040	1 1/2"	40	53	319.48	326	72
JZ22050	2"	50	63	543.9	555	48
JZ22065	2 1/2"	65	72	825.16	842	32
JZ22080	3"	80	77.5	1003.52	1024	24
JZ220100	4"	100	91.5	1702.26	1737	10
JZ220150	6"	150	118	3776.92	3854	4

Fig.270

Entire Thread Sockets

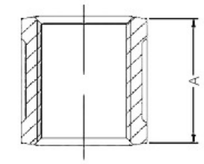

Code	Size		A	Unit Weight		Packing
				Black	Galv.	Carton
	NPS	DN	mm	g	g	Pcs/ctn
JZ27008	1/4"	8	26	38.22	39	800
JZ27010	3/8"	10	29	48.02	49	700
JZ27015	1/2"	15	35	82.32	84	450
JZ27020	3/4"	20	38	115.64	118	300
JZ27025	1"	25	44	178.36	182	180
JZ27032	1 1/4"	32	49	263.62	269	120
JZ27040	1 1/2"	40	53	338.1	345	72
JZ27050	2"	50	63	583.1	595	48
JZ27065	2 1/2"	65	72	822.22	839	32
JZ27080	3"	80	77.5	1065.26	1087	24
JZ270100	4"	100	91.5	1774.78	1811	10
JZ270150	6"	150	118	3789.66	3867	4

Fig.246

Socket Reducing, M&F

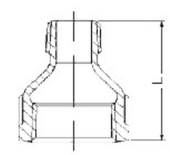

Code	Size		L	Unit Weight		Packing
				Black	Galv.	Carton
	NPS	DN	mm	g	g	Pcs/ctn
JZ2462015	3/4" × 1/2"	20 × 15	47	93.1	95	380
JZ2462515	1" × 1/2"	25 × 15	54	132.3	135	180
JZ2462520	1" × 3/4"	25 × 20	54	143.08	146	180
JZ2463220	1 1/4" × 3/4"	32 × 20	59	202.86	207	120
JZ2463225	1 1/4" × 1"	32 × 25	59	213.64	218	120
JZ2464020	1 1/2" × 3/4"	40 × 20	62	252.84	258	80
JZ2464025	1 1/2" × 1"	40 × 25	62	266.56	272	80
JZ2464032	1 1/2" × 1 1/4"	40 × 32	62	288.12	294	80
JZ2465025	2" × 1"	50 × 25	69	397.88	406	48
JZ2465032	2" × 1 1/4"	50 × 32	69	425.32	434	48
JZ2465040	2" × 1 1/2"	50 × 40	69	429.24	438	48

Fig.240

Sockets, Reducing



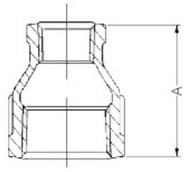

Code	Size		A	Unit Weight		Packing
				Black	Galv.	Carton
	NPS	DN	mm	g	g	Pcs/ctn
JZ240108	3/8" × 1/4"	10 × 8	29	42	43	500
JZ240158	1/2" × 1/4"	15 × 8	35	66	67	500
JZ2401510	1/2" × 3/8"	15 × 10	36	69	70	500
JZ240208	3/4" × 1/4"	20 × 8	38	86	88	360
JZ2402010	3/4" × 3/8"	20 × 10	38	91	93	360
JZ2402515	3/4" × 1/2"	20 × 15	38	105	107	360
JZ240258	3/4" × 1/4"	25 × 8	44	132	135	200
JZ2402510	1" × 3/8"	25 × 10	44	128	131	200
JZ2402515	1" × 1/2"	25 × 15	44	142	145	200
JZ2402520	1" × 3/4"	25 × 20	44	150	153	200
JZ2403215	1 1/4" × 1/2"	32 × 15	49	203	207	144
JZ2403220	1 1/4" × 3/4"	32 × 20	49	214	218	144
JZ2403225	1 1/4" × 1"	32 × 25	49	225	230	120
JZ2404015	1 1/2" × 1/2"	40 × 15	53	247	252	140
JZ2404020	1 1/2" × 3/4"	40 × 20	53	254	259	140
JZ2404025	1 1/2" × 1"	40 × 25	53	277	283	120
JZ2404032	1 1/2" × 1 1/4"	40 × 32	53	312	318	100
JZ2405015	2" × 1/2"	50 × 15	63	392	400	80
JZ2405020	2" × 3/4"	50 × 20	63	406	414	80
JZ2405025	2" × 1"	50 × 25	63	414	422	72
JZ2405032	2" × 1 1/4"	50 × 32	63	435	444	72
JZ2405040	2" × 1 1/2"	50 × 40	63	475	485	48
JZ2406515	2 1/2" × 1/2"	65 × 15	72	568	580	60
JZ2406520	2 1/2" × 3/4"	65 × 20	72	578	590	60
JZ2406525	2 1/2" × 1"	65 × 25	72	594	606	60
JZ2406532	2 1/2" × 1 1/4"	65 × 32	72	614	627	60
JZ2406540	2 1/2" × 1 1/2"	65 × 40	72	634	647	60
JZ2406550	2 1/2" × 2"	65 × 50	72	713	728	40
JZ2408015	3" × 1/2"	80 × 15	77.5	699	713	40
JZ2408020	3" × 3/4"	80 × 20	77.5	735	750	40
JZ2408025	3" × 1"	80 × 25	77.5	747	762	40
JZ2408032	3" × 1 1/4"	80 × 32	77.5	764	780	40
JZ2408040	3" × 1 1/2"	80 × 40	77.5	785	801	40
JZ2408050	3" × 2"	80 × 50	77.5	839	856	36
JZ2408065	3" × 2 1/2"	80 × 65	77.5	860	878	24
JZ24010015	4" × 1/2"	100 × 15	91.5	1139	1162	20
JZ24010020	4" × 3/4"	100 × 20	91.5	1223	1248	20
JZ24010025	4" × 1"	100 × 25	91.5	1233	1258	20
JZ24010032	4" × 1 1/4"	100 × 32	91.5	1279	1305	20
JZ24010040	4" × 1 1/2"	100 × 40	91.5	1294	1320	20
JZ24010050	4" × 2"	100 × 50	91.5	1326	1353	16
JZ24010065	4" × 2 1/2"	100 × 65	91.5	1378	1406	14
JZ24010080	4" × 3"	100 × 80	91.5	1438	1467	12
JZ24015080	6" × 4"	150 × 80	118			

Fig.529a

Socket M&F



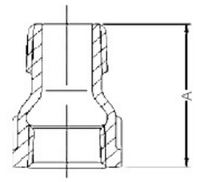

Code	Size		A	Unit Weight		Packing
				Black	Galv.	Carton
	NPS	DN	mm	g	g	Pcs/ctn
JZ529A15	1/2"	15	44	56.8	58	600
JZ529A20	3/4"	20	45	89.2	91	380
JZ529A25	1"	25	52	137.2	140	180
JZ529A32	1 1/4"	32	57	198.0	202	120
JZ529A40	1 1/2"	40	60	249.9	255	80
JZ529A50	2"	50	66	384.2	392	48

Fig.280

Hexagon Nipples



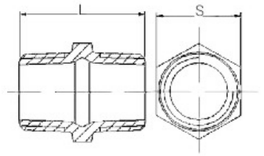

Code	Size		L	S	Unit Weight		Packing
					Black	Galv.	Carton
	NPS	DN	mm	mm	g	g	Pcs/ctn
JZ2808	1/4"	8	36	16.7	29.4	30	1000
JZ28010	3/8"	10	36	19.8	30.38	31	1000
JZ28015	1/2"	15	44	23.6	55.86	57	600
JZ28020	3/4"	20	47	29.2	84.28	86	300
JZ28025	1"	25	53	36	134.26	137	200
JZ28032	1 1/4"	32	56	45	186.2	190	140
JZ28040	1 1/2"	40	58	51	227.36	232	104
JZ28050	2"	50	68	63	365.54	373	56
JZ28065	2 1/2"	65	73	79.4	543.9	555	36
JZ28080	3"	80	81	91.6	768.32	784	24
JZ280100	4"	100	95	117	1237.74	1263	12
JZ280150	6"	150	107	170			

Fig.245

Nipples, Reducing



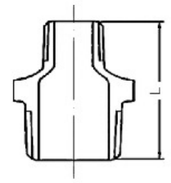

Code	Size		Unit Weight				
			L	S	Black	Galv.	PCS/
	NPS	DN	mm	mm	g	g	CTN.
JZ245158	1/2" × 1/4"	15 × 8	44	22	47.04	48	600
JZ2451510	1/2" × 3/8"	15 × 10	44	22	59.78	61	600
JZ2452015	3/4" × 1/2"	20 × 15	47	29.9	91.14	93	400
JZ2452515	1" × 1/2"	25 × 15	53	35.8	115.64	118	260
JZ2452520	1" × 3/4"	25 × 20	53	35.8	137.2	140	240
JZ2453215	1 1/4" × 1/2"	32 × 15	57	45.6	177.38	181	160
JZ2453220	1 1/4" × 3/4"	32 × 20	57	45.6	181.3	185	140
JZ2453225	1 1/4" × 1"	32 × 25	57	45.6	192.08	196	140
JZ2454015	1 1/2" × 1/2"	40 × 15	59	50.5	202.86	207	130
JZ2454020	1 1/2" × 3/4"	40 × 20	59	50.5	207.76	212	130
JZ2454025	1 1/2" × 1"	40 × 25	59	50.5	225.4	230	120
JZ2454032	1 1/2" × 1 1/4"	40 × 32	59	50.5	235.2	240	100
JZ2455015	2" × 1/2"	50 × 15	68	63.5	323.4	330	75
Zz2455020	2" × 3/4"	50 × 20	68	63.5	334.18	341	72
JZ2455025	2" × 1"	50 × 25	68	63.5	343	350	72
JZ2455032	2" × 1 1/4"	50 × 32	68	63.5	352.8	360	72
JZ2455040	2" × 1 1/2"	50 × 40	68	63.5	366.52	374	60
JZ2456550	2 1/2" × 2"	65 × 50	73	79.4			
JZ2458050	3" × 2"	80 × 50	81	91.6	749.7	765	24
JZ2458065	3" × 2 1/2"	80 × 65	81	91.6			
JZ24510050	4" × 2"	100 × 50	95	117			
JZ24510065	4" × 2 1/2"	100 × 65	95	117			
JZ24510080	4" × 3"	100 × 80	95	117			

Fig. 130

Tee, Equal



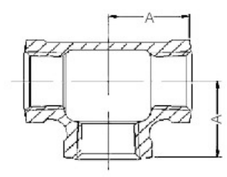

Code	Size		A	Unit Weight		Packing
				Black	Galv.	Carton
	NPS	DN	mm	g	g	Pcs/ctn
JZ1306	1/8"	6	18	44.1	45	400
JZ1308	1/4"	8	20	63.7	65	400
JZ13010	3/8"	10	24	88.2	90	300
JZ13015	1/2"	15	27	137.2	140	240
JZ13020	3/4"	20	32	198.94	203	140
JZ13025	1"	25	37	308.7	315	90
JZ13032	1 1/4"	32	44.5	479.22	489	56
JZ13040	1 1/2"	40	48.5	600.74	613	40
JZ13050	2"	50	57	977.06	997	20
JZ13065	2 1/2"	65	68.5	1520.96	1552	12
JZ13080	3"	80	77.5	2045.26	2087	10
JZ130100	4"	100	96.5	3589.74	3663	4
JZ130150	6"	150	129	8157.52	8324	2

Fig.130R

Tee, Reducing



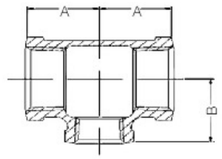

Code	Size		A	B	Unit Weight		Packing
					Black	Galv.	Carton
	NPS	DN	mm	mm	g	g	Pcs/ctn
JZ130R1510	1/2" × 3/8"	15 × 10	25	25	/	/	/
JZ130R2015	3/4" × 1/2"	20 × 15	29	30	180.32	184	150
JZ130R2510	1" × 3/8"	25 × 10	29	31	225.4	230	100
JZ130R2515	1" × 1/2"	25 × 15	31	33	238.14	243	100
JZ130R2520	1" × 3/4"	25 × 20	34	35	261.66	267	100
JZ130R3210	1 1/4" × 3/8"	32 × 10	31	36	309.68	316	64
JZ130R3215	1 1/4" × 1/2"	32 × 15	34	37	341.04	348	64
JZ130R3220	1 1/4" × 3/4"	32 × 20	36	40	371.42	379	64
JZ130R3225	1 1/4" × 1"	32 × 25	40	41	407.68	416	64
JZ130R4015	1 1/2" × 1/2"	40 × 15	35	41	406.7	415	52
JZ130R4020	1 1/2" × 3/4"	40 × 20	37	43	427.28	436	52
JZ130R4025	1 1/2" × 1"	40 × 25	41	45	481.18	491	42
JZ130R4032	1 1/2" × 1 1/4"	40 × 32	45	47	557.62	569	42
JZ130R5015	2" × 1/2"	50 × 15	37	47	589.96	602	40
JZ130R5020	2" × 3/4"	50 × 20	40	49	642.88	656	40
JZ130R5025	2" × 1"	50 × 25	43	51	687.96	702	30
JZ130R5032	2" × 1 1/4"	50 × 32	47	53	750.68	766	30
JZ130R5040	2" × 1 1/2"	50 × 40	51	54	826.14	843	24
JZ130R6515	2 1/2" × 1/2"	65 × 15	40.5	56	887.88	906	24
JZ130R6520	2 1/2" × 3/4"	65 × 20	43.5	57	919.24	938	24
JZ130R6525	2 1/2" × 1"	65 × 25	47.5	59	1017.24	1038	20
JZ130R6532	2 1/2" × 1 1/4"	65 × 32	51.5	61	1075.06	1097	16
JZ130R6540	2 1/2" × 1 1/2"	65 × 40	54.5	61	1145.62	1169	16
JZ130R6550	2 1/2" × 2"	65 × 50	59.5	64	1294.58	1321	16
JZ130R8015	3" × 1/2"	80 × 15	42.5	64	1114.26	1137	12
JZ130R8020	3" × 3/4"	80 × 20	45.5	65	1174.04	1198	12
JZ130R8025	3" × 1"	80 × 25	49.5	67	1267.14	1293	12
JZ130R8032	3" × 1 1/4"	80 × 32	54.5	69	1342.6	1370	12
JZ130R8040	3" × 1 1/2"	80 × 40	57.5	71	1440.6	1470	12
JZ130R8050	3" × 2"	80 × 50	61.5	71	1589.56	1622	10
JZ130R8065	3" × 2 1/2"	80 × 65	71.5	74	1862	1900	10
1Z130R10015	4" × 1/2"	100 × 15	49.5	78	1915.9	1955	8
JZ130R10020	4" × 3/4"	100 × 20	53.5	79	2038.4	2080	8
JZ130R10025	4" × 1"	100 × 25	56.5	82	2100.14	2143	8
JZ130R10032	4" × 1 1/4"	100 × 32	60.5	85	2214.8	2260	6
JZ130R10040	4" × 1 1/2"	100 × 40	62.5	85	2303.98	2351	6
JZ130R10050	4" × 2"	100 × 50	68.5	86	2558.78	2611	6
JZ130R10065	4" × 2 1/2"	100 × 65	77.5	89	2799.86	2857	6
JZ130R10080	4" × 3"	100 × 80	82.5	90	3138.94	3203	6

Fig.131R

Tees Reducing



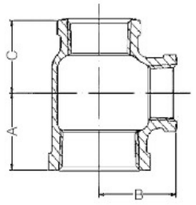

Code	Size		A	B	C	Unit Weight		Packing
						Black	Galv.	Carton
	NPS	DN	mm	mm	mm	g	g	Pcs/ctn
JZ131R201515	3/4" × 1/2" × 1/2"	20 × 15 × 15	29	30	27	159.74	163	120
JZ131R251520	1" × 1/2" × 3/4"	25 × 15 × 20	31	33	29	191.1	195	120
JZ131R252020	1" × 3/4" × 3/4"	25 × 20 × 20	34	35	32	157.78	161	120
JZ131R321525	1 1/4" × 1/2" × 1"	32 × 15 × 25	33	37	31	234.22	239	80
JZ131R322025	1 1/4" × 3/4" × 1"	32 × 20 × 25	36	40	34	287.14	293	60
JZ131R322525	1 1/4" × 1" × 1"	32 × 25 × 25	39	40	36	355.74	363	60
JZ131R323225	1 1/4" × 1 1/4" × 1"	32 × 32 × 25	44.5	44.5	41	406.7	415	40
JZ131R401532	1 1/2" × 1/2" × 1 1/4"	40 × 15 × 32	35	41	33	539.98	551	32
JZ131R402032	1 1/2" × 3/4" × 1 1/4"	40 × 20 × 32	37	43	36	514.5	525	36
JZ131R402525	1 1/2" × 1" × 1"	40 × 25 × 25	40	44	36	641.9	655	28
JZ131R402532	1 1/2" × 1" × 1 1/4"	40 × 25 × 32	41	45	40	711.48	726	20
JZ131R403225	1 1/2" × 1 1/4" × 1"	40 × 32 × 25	45	47	41	879.06	897	16
JZ131R403232	1 1/2" × 1 1/4" × 1 1/2"	40 × 32 × 32	45	47	44.5	1056.44	1078	12
JZ131R404025	1 1/2" × 1 1/2" × 1"	40 × 40 × 25	48.5	48.5	45	1025.08	1046	16
JZ131R405032	1 1/2" × 2" × 1 1/4"	40 × 50 × 32	54	51	53	1336.72	1364	10
JZ131R501540	2" × 1/2" × 1 1/2"	50 × 15 × 40	37	47	35	1622.88	1656	10
JZ131R502040	2" × 3/4" × 1 1/2"	50 × 20 × 40	40	49	37	2530.36	2582	6
JZ131R502532	2" × 1" × 1 1/4"	50 × 25 × 32	43	51	40	299.88	306	64
JZ131R502540	2" × 1" × 1 1/2"	50 × 25 × 40	42	49	40	344.96	352	68
JZ131R503232	2" × 1 1/4" × 1 1/4"	50 × 32 × 32	47	53	44.5	392	400	60
JZ131R503240	2" × 1 1/4" × 1 1/2"	50 × 32 × 40	47	53	45	491.96	502	40
JZ131R504025	2" × 1 1/2" × 1"	50 × 40 × 25	51	54	45	377.3	385	42
JZ131R504040	2" × 1 1/2" × 1 1/2"	50 × 40 × 40	51	54	48.5	406.7	415	40
JZ131R505025	2" × 2" × 1"	50 × 50 × 25	57	57	51	451.78	461	40
JZ131R651550	2 1/2" × 1/2" × 2"	65 × 15 × 50	40.5	56	37	534.1	545	36
JZ131R652050	2 1/2" × 3/4" × 2"	65 × 20 × 50	43.5	57	40	620.34	633	30
JZ131R652550	2 1/2" × 1" × 2"	65 × 25 × 50	45	58	42	702.66	717	24
JZ131R653240	2 1/2" × 1 1/4" × 1 1/2"	65 × 32 × 40	51.5	61	45	599.76	612	30
JZ131R653250	2 1/2" × 1 1/4" × 2"	65 × 32 × 50	51.5	61	47	673.26	687	30
JZ131R654050	2 1/2" × 1 1/2" × 2"	65 × 40 × 50	54.5	62	51	525.28	536	36
JZ131R655050	2 1/2" × 2" × 2"	65 × 50 × 50	59.5	64	57	525.28	536	36
JZ131R802565	3" × 1" × 2 1/2"	80 × 25 × 65	49.5	67	47.5	525.28	536	36
JZ131R803265	3" × 1 1/4" × 2 1/2"	80 × 32 × 65	54.5	69	51.5	552.72	564	24
JZ131R804065	3" × 1 1/2" × 2 1/2"	80 × 40 × 65	57.5	71	54.5	562.52	574	24
JZ131R805065	3" × 2" × 2 1/2"	80 × 50 × 65	61.5	71	59.5	705.6	720	16
JZ131R806565	3" × 2 1/2" × 2 1/2"	80 × 65 × 65	71.5	74	68.5	754.6	770	16

Fig.165

Lateral Y Branch 45° Tee


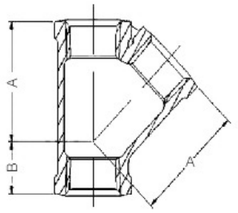

Code	Size		A	B	Unit Weight		Packing
					Black	Galv.	Carton
	NPS	DN	mm	mm	g	g	Pcs/ctn
JZ16515	1/2"	15	42	18	161.7	165	240
JZ16520	3/4"	20	51.5	18.5	244.02	249	100
JZ16525	1"	25	62	23	375.34	383	80
JZ16532	1 1/4"	32	75	28	595.84	608	40
JZ16540	1 1/2"	40	82	30	743.82	759	30
JZ16550	2"	50	100.5	32.5	1189.72	1214	16
JZ16565	2 1/2"	65	125	39	1935.5	1975	10
JZ16580	3"	80	140	45	2651.88	2706	8
JZ165100	4"	100	180	55	4817.68	4916	2

Fig.180

Crosshead Female



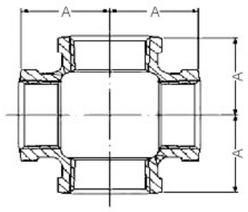

Code	Size		A	Unit Weight		Packing
				Black	Galv.	Carton
	NPS	DN	mm	g	g	Pcs/ctn
JZ18015	1/2"	15	27	167	170	180
JZ18020	3/4"	20	32	246	251	96
JZ18025	1"	25	37	380	388	72
JZ18032	1 1/4"	32	44.5	576	588	36
JZ18040	1 1/2"	40	48.5	712	727	30
JZ18050	2"	50	57	1147	1170	12
JZ18065	2 1/2"	65	68.5	1740	1776	10
JZ18080	3"	80	77.5	2478	2529	6
JZ180100	4"	100	96.5	4211	4297	2

Fig.180R

Crosses, Reducing



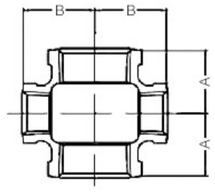

Code	Size		A	B	Unit Weight		Packing
					Black	Galv.	Carton
	NPS	DN	mm	mm	g	g	Pcs/ctn
JZ180R2015	3/4" × 1/2"	20 × 15	29	30	199	203	120
JZ180R2515	1" × 1/2"	25 × 15	31	33	261	266	96
JZ180R2520	1" × 3/4"	25 × 20	34	35	310	316	80
JZ180R3215	1 1/4" × 1/2"	32 × 15	34	37	365	372	64
JZ180R3220	1 1/4" × 3/4"	32 × 20	36	40	407	415	60
JZ180R3225	1 1/4" × 1"	32 × 25	40	41	460	469	56
JZ180R4015	1 1/2" × 1/2"	40 × 15	35	41	414	422	52
JZ180R4020	1 1/2" × 3/4"	40 × 20	37	43	473	483	52
JZ180R4025	1 1/2" × 1"	40 × 25	41	45	522	533	42
JZ180R4032	1 1/2" × 1 1/4"	40 × 32	45	47	646	659	34
JZ180R5015	2" × 1/2"	50 × 15	37	47	616	629	36
JZ180R5020	2" × 3/4"	50 × 20	40	49	674	688	36
JZ180R5025	2" × 1"	50 × 25	43	51	743	758	28
JZ180R5032	2" × 1 1/4"	50 × 32	47	53	832	849	28
JZ180R5040	2" × 1 1/2"	50 × 40	51	54	901	919	20
JZ180R6515	2 1/2" × 1/2"	65 × 15	40.5	56	878	896	20
JZ180R6520	2 1/2" × 3/4"	65 × 20	43.5	57	950	969	20
JZ180R6525	2 1/2" × 1"	65 × 25	47.5	59	1035	1056	18
JZ180R6532	2 1/2" × 1 1/4"	65 × 32	51.5	61	1174	1198	16
JZ180R6540	2 1/2" × 1 1/2"	65 × 40	54.5	61	1201	1225	14
JZ180R6550	2 1/2" × 2"	65 × 50	59.5	64	1438	1467	10
JZ180R8015	3" × 1/2"	80 × 15	42.5	64	1107	1130	12
JZ180R8020	3" × 3/4"	80 × 20	45.5	65	1155	1179	12
JZ180R8025	3" × 1"	80 × 25	49.5	67	1290	1316	12
JZ180R8032	3" × 1 1/4"	80 × 32	54.5	69	1438	1467	12
JZ180R8040	3" × 1 1/2"	80 × 40	57.5	71	1560	1592	10
JZ180R8050	3" × 2"	80 × 50	61.5	71	1695	1730	10
JZ180R8065	3" × 2 1/2"	80 × 65	71.5	74	1981	2021	8
JZ180R10015	4" × 1/2"	100 × 15	49.5	78	1826	1863	6
JZ180R10020	4" × 3/4"	100 × 20	53.5	79	1886	1924	6
JZ180R10025	4" × 1"	100 × 25	56.5	82	2025	2066	6
JZ180R10032	4" × 1 1/4"	100 × 32	60.5	85	2264	2310	6
JZ180R10040	4" × 1 1/2"	100 × 40	62.5	85	2288	2335	4
JZ180R10050	4" × 2"	100 × 50	68.5	86	2529	2581	4
JZ180R10065	4" × 2 1/2"	100 × 65	77.5	89	2819	2877	4
JZ180R10080	4" × 3"	100 × 80	82.5	90	3177	3242	4

Fig.330

Union, Flat Seat


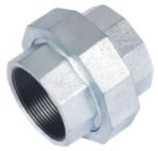
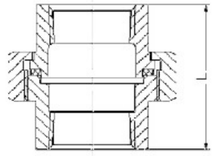

Code	Size		A	Unit Weight		Packing
				Black	Galv.	Carton
	NPS	DN	mm	g	g	Pcs/ctn
JZ33010	3/8"	10	39	156.8	160	280
JZ33015	1/2"	15	46	200.9	205	180
JZ33020	3/4"	20	50	265.58	271	120
JZ33025	1"	25	56	392	400	88
JZ33032	1 1/4"	32	63	583.1	595	56
JZ33040	1 1/2"	40	68	733.04	748	36
JZ33050	2"	50	76	1056.44	1078	28
JZ33065	2 1/2"	65	83	1675.8	1710	12
JZ33080	3"	80	93	2175.6	2220	10
JZ330100	4"	100	113.5	3724	3800	6

Fig.331

Union, Flat Seat, M&F



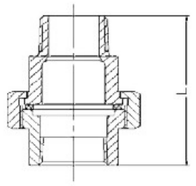

Code	Size		L	Unit Weight		Packing
				Black	Galv.	Carton
	NPS	DN	mm	g	g	Pcs/ctn
JZ33115	1/2"	15	64	219.52	224	140
JZ33120	3/4"	20	70	275.38	281	120
JZ33125	1"	25	78	423.36	432	80
JZ33132	1 1/4"	32	88	661.5	675	40
JZ33140	1 1/2"	40	93	784	800	32
JZ33150	2"	50	104	1200.5	1225	20

Fig.340

Union, Taper Seat


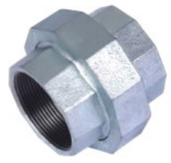
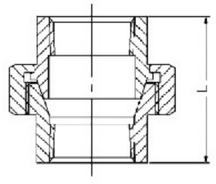

Code	Size		L	Unit Weight		Packing
				Black	Galv.	Carton
	NPS	DN	mm	g	g	Pcs/ctn
JZ3408	1/4"	8	42	103.88	106	200
JZ34010	3/8"	10	45	152.88	156	200
JZ34015	1/2"	15	47	164.64	168	180
JZ34020	3/4"	20	51.5	251.86	257	120
JZ34025	1"	25	57	330.26	337	88
JZ34032	11/4"	32	65	560.56	572	56
JZ34040	11/2"	40	71	703.64	718	36
JZ34050	2"	50	79	1023.12	1044	28
JZ34065	21/2"	65	85.5	1615.04	1648	12
JZ34080	3"	80	94.5	2242.24	2288	10
JZ340100	4"	100	110.5	3615.22	3689	6

Fig.341

Union, Taper Seat, M&F



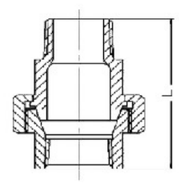

Code	Size		L	Unit Weight		Packing
				Black	Galv.	Carton
	NPS	DN	mm	g	g	Pcs/ctn
JZ34115	1/2"	15	65	196	200	140
JZ34120	3/4"	20	71.5	289.1	295	120
JZ34125	1"	25	79	392	400	80
JZ34132	11/4"	32	90	635.04	648	40
JZ34140	11/2"	40	96	801.64	818	32
JZ34150	2"	50	107	1149.54	1173	20

Fig.342

Brass Unions, Taper Seat



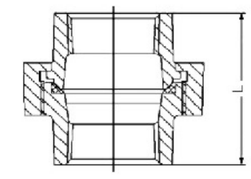

Code	Size		L	Unit Weight		Packing
				Black	Galv.	Carton
	NPS	DN	mm	g	g	Pcs/ctn
JZ3428	1/4"	8	42	104.86	107	200
JZ34210	3/8"	10	45	143.08	146	200
JZ34215	1/2"	15	47	168.56	172	180
JZ34220	3/4"	20	51	256.76	262	120
JZ34225	1"	25	56.5	333.2	340	88
JZ34232	11/4"	32	64	583.1	595	56
JZ34240	11/2"	40	70	731.08	746	36
JZ34250	2"	50	78.5	1058.4	1080	28
JZ34265	21/2"	65	84.5	1804.18	1841	12
JZ34280	3"	80	94	2314.76	2362	10
JZ342100	4"	100	110	3731.84	3808	6

Fig.331

Union, Flat Seat, M&F



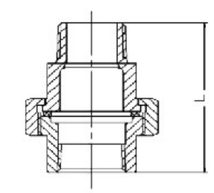

Code	Size		L	Unit Weight		Packing
				Black	Galv.	Carton
	NPS	DN	mm	g	g	Pcs/ctn
JZ34115	1/2"	15	65	196	200	140
JZ34120	3/4"	20	71.5	289.1	295	120
JZ34125	1"	25	79	392	400	80
JZ34132	11/4"	32	90	635.04	648	40
JZ34140	11/2"	40	96	801.64	818	32
JZ34150	2"	50	107	1149.54	1173	20

Fig.95

Union Elbow Falt Seat FF

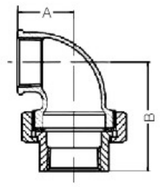

Code	Size		A	B	Unit Weight		Packing
					Black	Galv.	Carton
	NPS	DN	mm	mm	g	g	Pcs/ctn
JZ9515	1/2"	15	24.5	54	194.04	198	60
JZ9520	3/4"	20	29	60	303.8	310	40
JZ9525	1"	25	35	68	471.38	481	30
JZ9532	1 1/4"	32	42	80	703.64	718	20
JZ9540	1 1/2"	40	45.5	86	873.18	891	18
JZ9550	2"	50	53.5	97	1327.9	1355	10

Fig.97

Union, Taper Seat, M&F

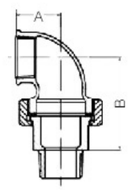

Code	Size		A	B	Unit Weight		Packing
					Black	Galv.	Carton
	NPS	DN	mm	mm	g	g	Pcs/ctn
JZ9715	1/2"	15	24.5	72	220.5	225	60
JZ9720	3/4"	20	29	80	328.3	335	40
JZ9725	1"	25	35	90	517.44	528	30
JZ9732	1 1/4"	32	42	105	770.28	786	20
JZ9740	1 1/2"	40	45.5	111	969.22	989	16
JZ9750	2"	50	53.5	125	1473.92	1504	10

Fig.241

Bushings

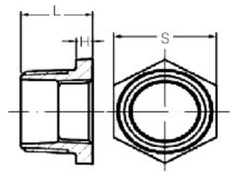

Code	Size		L	S	H	Unit Weight		Packing
						Black	Galv.	Carton
	NPS	DN	mm	mm	mm	g	g	Pcs/ctn
JZ24186	1/4" × 1/8"	8 × 6	18.5	16.8	6	14.7	15	1800
JZ241106	3/8" × 1/8"	10 × 6	18	20	6	22.54	23	1500
JZ241108	3/8" × 1/4"	10 × 8	18.5	18.4	6	18.62	19	1800
JZ241158	3/4" × 3/8"	15 × 8	22.5	22	6	61.74	63	500
JZ2411510	3/4" × 1/4"	15 × 10	22.5	22	6	66.64	68	600
JZ241208	1/2" × 3/8"	20 × 8	24.5	29.6	6	32.34	33	960
JZ2412010	1/2" × 1/4"	20 × 10	24.5	29.6	6	38.22	39	900
JZ2412015	3/4" × 1/2"	20 × 15	24.5	29.6	6	50.96	52	600
JZ241258	1" × 1/4"	25 × 8	28	37.4	6.5	105.84	108	300
JZ2412510	1" × 3/8"	25 × 10	28	37.4	6.5	111.72	114	300
JZ2412515	1" × 1/2"	25 × 15	28	37.4	6.5	97.02	99	300
JZ2412520	1" × 3/4"	25 × 20	28	37.4	6.5	81.34	83	300
JZ2413215	1 1/4" × 1/2"	32 × 15	30	45.6	7	167.58	171	200
JZ2413220	1 1/4" × 3/4"	32 × 20	30	45.6	7	151.9	155	200
JZ2413225	1 1/4" × 1"	32 × 25	30	45.6	7	126.42	129	200
JZ2414015	1 1/2" × 1/2"	40 × 15	30	50	7.5	197.96	202	160
JZ2414020	1 1/2" × 3/4"	40 × 20	30	50	7.5	207.76	212	160
JZ2414025	1 1/2" × 1"	40 × 25	30	50	7.5	182.28	186	160
JZ2414032	1 1/2" × 1 1/4"	40 × 32	30	50	7.5	123.48	126	160
JZ2415015	2" × 1/2"	50 × 15	33	64.1	8.5	289.1	295	96
JZ2415020	2" × 3/4"	50 × 20	33	64.1	8.5	298.9	305	96
JZ2415025	2" × 1"	50 × 25	33	64.1	8.5	342.02	349	96
JZ2415032	2" × 1 1/4"	50 × 32	33	64.1	8.5	302.82	309	96
JZ2415040	2" × 1 1/2"	50 × 40	33	64.1	8.5	255.78	26]	96
JZ2416515	2 1/2" × 1/2"	65 × 15	39	79.6	9	441	450	68
JZ2416520	2 1/2" × 3/4"	65 × 20	39	79.6	9	456.68	466	68
JZ2416525	2 1/2" × 1"	65 × 25	39	79.6	9	448.84	458	68
JZ2416532	2 1/2" × 1 1/4"	65 × 32	39	79.6	9	512.54	523	68
JZ2416540	2 1/2" × 1 1/2"	65 × 40	39	79.6	9	519.4	530	68
JZ2416550	2 1/2" × 2"	65 × 50	39	79.6	9	446.88	456	68
JZ2418015	3" × 1/2"	80 × 15	42	93	10	633.08	646	36
JZ2418020	3" × 3/4"	80 × 20	42	93	10	632.1	645	36
JZ2418025	3" × 1"	80 × 25	42	93	10	650.72	664	36
JZ2418032	3" × 1 1/4"	80 × 32	42	93	10	637.98	651	36
JZ2418040	3" × 1 1/2"	80 × 40	42	93	10	694.82	709	36
JZ2418050	3" × 2"	80 × 50	42	93	10	773.22	789	36
JZ2418065	3" × 2 1/2"	80 × 65	42	93	10	556.64	568	36
JZ24110015	4" × 1/2"	100 × 15	49	118.4	11	1070.16	1092	18
JZ24110020	4" × 3/4"	100 × 20	49	118.4	11	1085.84	1108	18
JZ24110025	4" × 1"	100 × 25	49	118.4	11	1078.98	1101	18
JZ24110032	4" × 1 1/4"	100 × 32	49	118.4	11	1126.02	1149	18
JZ24110040	4" × 1 1/2"	100 × 40	49	118.4	11	1097.6	1120	18
JZ24110050	4" × 2"	100 × 50	49	118.4	11	1121.12	1144	18
JZ24110065	4" × 2 1/2"	100 × 65	49	118.4	11	1350.44	1378	18
JZ24110080	4" × 3"	100 × 80	49	118.4	11	1203.44	1228	18
JZ24115080	6" × 3"	150 × 80	60	170.8	13			
JZ241150100	6" × 4"	150 × 100	60	170.8	13			

Fig.290

Beaded Plug

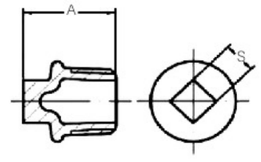

Code	Size		A	S	Unit Weight		Packing
					Black	Galv.	Carton
	NPS	DN	mm	mm	g	g	Pcs/ctn
JZ2908	1/4"	8	22.5	6	17.64	18	2000
JZ29010	3/8"	10	25	7	29.4	30	1300
JZ29015	1/2"	15	28	10	35.28	36	900
JZ29020	3/4"	20	32	12	55.86	57	600
JZ29025	1"	25	36	16	93.1	95	300
JZ29032	1 1/4"	32	38.5	20	148.96	152	220
JZ29040	1 1/2"	40	41	22	177.38	181	150
JZ29050	2"	50	47	28	293.02	299	80
JZ29065	2 1/2"	65	53	30	512.54	523	64
JZ29080	3"	80	58	34	748.72	764	36
JZ290100	4"	100	72	44	1097.6	1120	28

Fig.291

Plain Plug

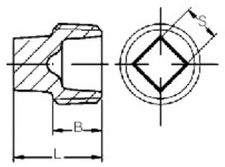

Code	Size		L	B	S	Unit Weight		Packing
						Black	Galv.	Carton
	NPS	DN	mm	mm	mm	g	g	Pcs/ctn
JZ2918	1/4"	8	15.5	10	6	8.82	9	2400
JZ29110	3/8"	10	17	10	7	15.68	16	2200
JZ29115	1/2"	15	22.5	13	10	24.5	25	1400
JZ29120	3/4"	20	24	14	12	36.26	37	800
JZ29125	1"	25	27	16.5	15	57.82	59	500
JZ29132	1 1/4"	32	30	20	18	103.88	106	300
JZ29140	1 1/2"	40	31	21	22	140.14	143	200
JZ29150	2"	50	36	25	26	230.3	235	120
JZ29165	2 1/2"	65	40.5	27	30	348.88	356	72
JZ29180	3"	80	45.5	29.5	34	512.54	523	64
JZ291100	4"	100	58.5	38	44	978.04	998	36
JZ291150	6"	150	65	42	65			

Fig.300

Caps

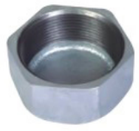

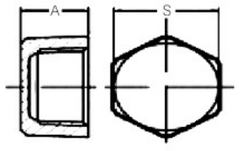

Code	Size		A	S	Unit Weight		Packing
					Black	Galv.	Carton
	NPS	DN	mm	mm	g	g	Pcs/ctn
JZ30010	3/8"	10	17	20.6	29.4	30	1200
JZ30015	1/2"	15	19	24.6	44.1	45	700
JZ30020	3/4"	20	22	30.4	68.6	70	500
JZ30025	1"	25	24	37.2	106.82	109	360
JZ30032	1 1/4"	32	27	47	180.32	184	220
JZ30040	1 1/2"	40	28	53	223.44	228	160
JZ30050	2"	50	32	65	349.86	357	100

Fig.301

Round Caps

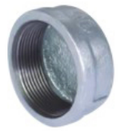

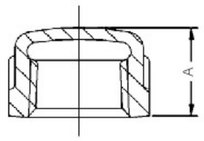

Code	Size		A	Unit Weight		Packing
				Black	Galv.	Carton
	NPS	DN	mm	g	g	Pcs/ctn
JZ3018	1/4"	8	16	24.5	25	1200
JZ30110	3/8"	10	17	29.4	30	1200
JZ30115	1/2"	15	19	47.04	48	700
JZ30120	3/4"	20	22	68.6	70	500
JZ30125	1"	25	24	106.82	109	360
JZ30132	1 1/4"	32	27	162.68	166	220
JZ30140	1 1/2"	40	27.5	203.84	208	160
JZ30150	2"	50	32	319.48	326	100
JZ30165	2 1/2"	65	36	432.18	441	60
JZ30180	3"	80	39	610.54	623	38
JZ301100	4"	100	46	1078.98	1101	20
JZ301150	6"	150	56			

WEIZIDOM

www.wsdsolution.com
www.wsdvalves.com

Groove Pipe Fitting

JIANZHI & HITHERTOP

WEIZIDOM GROUP

Rigid Coupling

Flexible Coupling

Mechanical Tee Grooved outlet

Mechanical Tee Threaded outlet

Grooved flange

90° Elbow

45° Elbow

22.5° Elbow

11.25° Elbow

Tee

Grooved Reducing Tee

Threaded Reducing Tee

Cross

Grooved Reducing Cross

Threaded Reducing Cross

Cap

Grooved Concentric Reducer

Threaded Concentric Reducer

Grooved Eccentric Reducer

Adaptor Flange

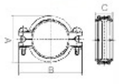

刚性卡箍
Rigid Coupling
XGQT1

Nominal Size mm/in	Pipe OD. mm/in	Working Pressure psi/MPa	Dimensions mm/in			Bolt Size	Nominal Size mm/in	Pipe OD. mm/in	Working Pressure psi/MPa	Dimensions mm/in			Bolt Size
			A mm/in	B mm/in	C mm/in	No.–Size mm				A mm/in	B mm/in	C mm/in	No.–Size mm
规格	管子基本尺寸	工作压力	尺寸			螺栓	规格	管子基本尺寸	工作压力	尺寸			螺栓
25 1	33.7 1.327		56 2.20	98 3.85	44 1.74	3/8*45–2	125 5	133 5.25		162 6.37	213 8.38	50 1.96	1/2*75–2
32 1¼	42.4 1.669		65 2.55	108 4.25	44 1.74	3/8*45–2	125 5	139.7 5.5		170 6.73	220 8.66	50 1.96	1/2*75–2
40 1½	48.3 1.9		72 2.84	114 4.48	44 1.74	3/8*45–2	125 5	141.3 5.563		171 6.73	222 8.74	50 1.96	1/2*75–2
50 2	60.3 2.375		84 3.30	126 4.96	46 1.81	3/8*55–2	150 6	159 6.25		190 7.48	241 9.48	50 1.96	1/2*75–2
65 2½	73 2.875	300psi 2.07MPa	97 3.81	140 5.52	46 1.81	3/8*55–2	150 6	165.1 6.5	300psi 2.07MPa	196 7.71	248 9.76	50 1.96	1/2*75–2
65 2½	76.1 3		100 3.93	142 5.59	46 1.81	3/8*55–2	150 6	168.3 6.625		200 7.87	252 9.92	50 1.96	1/2*75–2
80 3	88.9 3.5		114 4.48	154 6.06	46 1.81	3/8*55–2	200 8	219.1 8.625		258 10.15	322 12.67	60 2.36	5/8*95–2
100 4	108 4.25		135 5.31	186 7.32	50 1.96	1/2*65–2	250 10	273 10.75		318 12.51	400 15.74	62 2.44	3/4*110–2
100 4	114.3 4.5		138 5.43	192 7.55	50 1.96	1/2*65–2	300 12	323.9 12.750		372 14.64	454 17.87	64 2.51	3/4*120–2

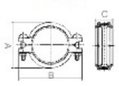

挠性卡箍
Flexible Coupling
XGQT2

Nominal Size mm/in	Pipe OD. mm/in	Working Pressure psi/MPa	Dimensions mm/in			Bolt Size	Nominal Size mm/in	Pipe OD. mm/in	Working Pressure psi/MPa	Dimensions mm/in			Bolt Size
			A mm/in	B mm/in	C mm/in	No.–Size mm				A mm/in	B mm/in	C mm/in	No.–Size mm
规格	管子基本尺寸	工作压力	尺寸			螺栓	规格	管子基本尺寸	工作压力	尺寸			螺栓
25 1	33.7 1.327		56 2.20	98 3.85	44 1.74	3/8*45–2	125 5	133 5.25		162 6.37	213 8.38	50 1.96	1/2*75–2
32 1¼	42.4 1.669		65 2.55	108 4.25	44 1.74	3/8*45–2	125 5	139.7 5.5		170 6.73	220 8.66	50 1.96	1/2*75–2
40 1½	48.3 1.9		72 2.84	114 4.48	44 1.74	3/8*45–2	125 5	141.3 5.563		171 6.73	222 8.74	50 1.96	1/2*75–2
50 2	60.3 2.375		84 3.30	126 4.96	46 1.81	3/8*55–2	150 6	159 6.25		190 7.48	241 9.48	50 1.96	1/2*75–2
65 2½	73 2.875	300psi 2.07MPa	97 3.81	140 5.52	46 1.81	3/8*55–2	150 6	165.1 6.5	300psi 2.07MPa	196 7.71	248 9.76	50 1.96	1/2*75–2
65 2½	76.1 3		100 3.93	142 5.59	46 1.81	3/8*55–2	150 6	168.3 6.625		200 7.87	252 9.92	50 1.96	1/2*75–2
80 3	88.9 3.5		114 4.48	154 6.06	46 1.81	3/8*55–2	200 8	219.1 8.625		258 10.15	322 12.67	60 2.36	5/8*95–2
100 4	108 4.25		135 5.31	186 7.32	50 1.96	1/2*65–2	250 10	273 10.75		318 12.51	400 15.74	62 2.44	3/4*110–2
100 4	114.3 4.5		138 5.43	192 7.55	50 1.96	1/2*65–2	300 12	323.9 12.750		372 14.64	454 17.87	64 2.51	3/4*120–2

注：产品尺寸可能会因技术原因有所改动，恕不另行通知，如有疑问请征询威斯盾集团技术部
Note: The measurements of products maybe changed for the technical reason without responsibility note, please feel free to contact technical Dept.

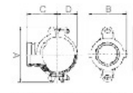

沟槽式机械三通
Mechanical Tee
Grooved outlet
XGQT3

Nominal Size mm/in	Pipe OD. mm/in	Working Pressure psi/MPa	Hole Dia. Mm/in +1.6,0/+0.063,0	Dimensions mm/in				Bolt Size	Nominal Size mm/in	Pipe OD. mm/in	Working Pressure psi/MPa	Hole Dia. Mm/in +1.6,0/+0.063,0	Dimensions mm/in				Bolt Size
规格	管子基本尺寸	工作压力	开孔尺寸	A	B	C	D	螺栓规格	规格	管子基本尺寸	工作压力	开孔尺寸	A	B	C	D	螺栓规格
50×25 2×1	60.3×33.7 2.375×1.315		38 1.50	118 4.64	71 2.80	69 2.71	40 1.57	3/8*55–2	80×50 3×2	88.9×60.3 3.500×2.375		61 2.40	150 5.90	100 3.93	85 3.33	56 2.20	3/8*55–2
50×32 2×1¼	60.3×42.4 2.375×1.660		46 1.81	118 4.64	75 2.95	69 2.71	40 1.57	3/8*55–2	80×65 3×2½	88.9×73.0 3.500×2.875		61 2.40	150 5.90	100 3.93	85 3.33	56 2.20	3/8*55–2
50×40 2×1½	60.3×48.3 2.375×1.900		46 1.81	118 4.64	75 2.95	69 2.71	40 1.57	3/8*55–2	80×65 3×2½	88.9×76.1 3.500×3.000		61 2.40	150 5.90	100 3.93	85 3.33	56 2.20	3/8*55–2
65×25 2½×1	73.0×33.7 2.875×1.315		38 1.50	133 5.23	72 2.83	77 3.03	47 1.a5	3/8*55–2	100×50 4×2	108.0×60.3 4.250×2.375		61 2.40	172 6.77	106.5 4.19	92 3.78	64.5 2.54	1/2*65–2
65×32 2½×1¼	73.0×42.4 2.875×1.660		46 1.81	133 523	81 3.18	77 3.03	47 1.65	3/8*55–2	100×65 4×2½	108.0×76.1 4.250×3.000		81 3.18	172 6.2277	106.5 4.19	92 3.78	64.5 2.54	1/2*65_2
65×40 2½×1½	73.0×48.3 2.875×1.900	300psi 2.07MPa	53 2.08	133 5.23	86 3.38	77 3.03	47 1.65	3/8*55–2	100×25 4×1	114.3×33.7 4.500×1.315	300psi 2.07MPa	38 1.50	182 7.16	73 2.87	99 3.90	70 2.76	1/2*65–2
65×25 2½×1	76.1×33.7 3.000×1.315		38 1.50	136 5.35	72 2.83	78 3.07	49 1.93	3/8*55–2	100×32 4×1¼	114.3×42.4 4.500×1.660		46 1.81	182 7.16	82 3.22	99 3.90	70 2.76	1/2*65–2
65×32 2½×1¼	76.1×42.4 3.000×1.660		46 1.81	136 5.35	81 3.18	78 3.07	49 1.93	3/8*55–2	100×40 4×1½	114.3×48.3 4.500×1.900		53 2.08	182 7.16	87 3.42	99 3.90	70 2.76	1/2*65–2
65×40 2½×1½	76.1×48.3 3.000×1.900		53 2.08	136 5.35	86 3.38	78 3.07	49 1.93	3/8*55–2	100×50 4×2	114.3×60.3 4.500×2.375		61 2.40	182 7.16	100 3.93	99 3.90	70 2.76	1/2*65–2
80×25 3×1	88.9×33.7 3.500×1.315		38 1.50	150 5.98	73 2.87	85 3.33	56 2.20	3/8*55–2	100×65 4×2½	114.3×73.0 4.500×2.875		81 3.18	182 7.16	118 4.64	99 3.90	70 2.76	1/2*65–2
80×32 3×1¼	88.9×42.4 3.500×1.660		46 1.81	150 5.98	82 3.22	85 3.33	56 2.20	3/8*55–2	100×65 4×2½	114.3×76.1 4.500×3.000		81 3.18	182 7.16	118 4.64	99 3.90	70 2.76	1/2*65–2
80×40 3×1½	88.9×48.3 3.500×1.900		53 2.08	150 5.90	87 3.42	85 3.33	56 2.20	3/8*55–2	100×80 4×3	114.3×88.9 4.500×3.500		86 3.38	182 7.16	124 4.88	99 3.90	70 2.76	1/2*65–2

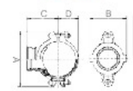

沟槽式机械三通
Mechanical Tee
Grooved outlet
XGQT3

Nominal Size mm/in	Pipe OD. mm/in	Working Pressure psi/MPa	Hole Dia. Mm/in +1.6,0/+0.063,0	Dimensions mm/in				Bolt Size	Nominal Size mm/in	Pipe OD. mm/in	Working Pressure psi/MPa	Hole Dia. Mm/in +1.6,0/+0.063,0	Dimensions mm/in				Bolt Size
规格	管子基本尺寸	工作压力	开孔尺寸	A	B	C	D	螺栓规格	规格	管子基本尺寸	工作压力	开孔尺寸	A	B	C	D	螺栓规格
125×50 5×2	139.7×60.3 5.500×2.375		61 2.40	215 8.46	102 4.01	113 4.44	83 3.26	1/2*75–2	150×50 6×2	165.1×60.3 6.500×2.375		61 2.40	240 9.44	102 4.01	126 4.96	96 3.77	9/16*75–2
125×65 5×2½	139.7×76.1 5.500×3.000		81 3.18	215 8.46	119 4.68	113 4.44	83 3.26	1/2*75–2	150×65 6×2½	165.1×76.1 6.500×3.000		81 3.18	240 9.44	119 4.68	126 4.96	96 3.77	9/16*75–2
125×80 5×3	139.7×88.9 5.500×3.500		86 3.38	215 8.46	134 5.27	113 4.44	83 3.26	1/2*75–2	150×80 6×3	165.1×88.9 6.500×3.500		86 3.38	240 9.44	134 5.27	126 4.96	96 3.77	9/16*75–2
125×100 5×4	139.7×114.3 5.500×4.500		114 4.48	215 8.46	158 6.22	115 4.52	83 3.26	1/2*75–2	150×100 6×4	165.1×114.3 6.500×4.500		114 4.48	240 9.44	158 6.22	128 5.04	96 3.77	9/16*75–2
125×50 5×2	141.3×60.3 5.563×2.375		61 2.40	215 8.46	102 4.01	114 4.48	83 3.26	1/2*75–2	150×50 6×2	168.3×60.3 6.625×2.375		61 2.40	244 9.60	102 4.01	128 5.04	97 3.81	9/16*75–2
125×65 5×2½	141.3×76.1 5.563×3.000		81 3.18	215 8.46	119 4.64	114 4.48	83 3.26	1/2*75–2	150×65 6×2½	168.3×73.0 6.625×2.875		81 3.18	244 9.60	119 4.68	128 5.04	97 3.81	9/16*75–2
125×80 5×3	141.3×88.9 5.563×3.500	300psi 2.07MPa	86 3.38	215 8.46	134 5.27	114 4.48	83 3.26	1/2*75–2	150×65 6×2½	168.3×76.1 6.625×3.000	300psi 2.07MPa	81 3.18	244 9.60	119 4.68	128 5.04	97 3.81	9/16*75–2
125×100 5×4	141.3×114.3 5.563×4.500		114 4.48	215 8.46	158 6.22	115 4.52	83 3.26	1/2*75–2	150×80 6×3	168.3×88.9 6.625×3.500		86 3.38	244 9.60	134 5.27	128 5.04	97 3.81	9/16*75–2
150×50 6×2	159.0×60.3 6.250×2.375		61 2.40	230 9.05	98 3.85	123 4.84	90 3.54	9/16*75–2	150×100 6×4	168.3×114.3 6.625×4.500		114 4.48	244 9.60	158 6.22	130 5.11	97 3.81	9/16*75–2
150×65 6×2½	159.0×76.1 6.250×3.000		81 3.18	230 9.05	121 4.76	123 4.84	90 3.54	9/16*75–2	200×50 8×2	219.1×60.3 8.625×2.375		61 2.40	308 12.12	102 4.01	153 6.02	124 4.88	5/8*95–2
150×80 6×3	159.0×88.9 6.250×3.500		86 3.38	230 9.05	134 5.27	123 4.84	90 3.54	9/16*75–2	200×65 8×2½	219.1×76.1 8.625×3.000		81 3.18	308 12.12	119 4.68	153 6.02	124 4.88	5/8*95–2
150×100 6×4	159.0×108.0 6.250×4.250		114 4.48	230 9.05	155 6.10	123 4.84	90 3.54	9/16*75–2	200×80 8×3	219.1×88.9 8.625×3.500		86 3.38	308 12.12	134 5.27	153 6.02	124 4.88	5/8*95–2
150×100 6×4	159.0×114.3 6.250×4.500		114 4.48	230 9.05	155 6.10	123 4.84	90 3.54	9/16*75–2	200×100 8×4	219.1×114.3 8.625×4.500		114 4.48	308 12.12	158 6.22	155 6.10	124 4.88	5/8*95–2

注：产品尺寸可能会因技术原因有所改动，恕不另行通知，如有疑问请征询威斯盾集团技术部
Note: The measurements of products maybe changed for the technical reason without responsibility note, please feel free to contact technical Dept.

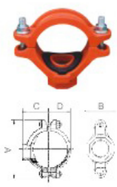

螺纹式机械三通
Mechanical Tee
Threaded outlet
XGQT3S

Nominal Size mm/in 规格	Pipe OD. mm/in 管子基本尺寸	Working Pressure psi/MPa 工作压力	Hole Dia. Mm/in +1.6,0/+0.063,0 开孔尺寸	Dimensions mm/in A	B	C	D	Bolt Size 螺栓规格	Nominal Size mm/in 规格	Pipe OD. mm/in 管子基本尺寸	Working Pressure psi/MPa 工作压力	Hole Dia. Mm/in +1.6,0/+0.063,0 开孔尺寸	Dimensions mm/in A	B	C	D	Bolt Size 螺栓规格
50×15 2×1/2	60.3×21.3 2.375×0.825	300psi 2.07MPa	30 1.18	116 4.57	68 2.68	58 2.28	40 1.57	3/8*55-2	65×15 2 1/2×1/2	76.1×21.3 3.000×0.825	300psi 2.07MPa	30 1.18	137 5.39	71 2.80	68 2.72	49.5 1.95	3/8*55-2
50×20 2×3/4	60.3×26.9 2.375×1.050		30 1.18	116 4.57	68 2.68	58 2.28	39 1.53	3/8*55-2	65×20 2 1/2×3/4	76.1×26.9 3.000×1.050		30 1.18	137 5.39	71 2.80	68 2.72	49.5 1.95	3/8*55-2
50×25 2×1	60.3×33.7 2.375×1.315		38 1.50	118 4.64	71 2.80	58 2.36	40 1.57	3/8*55-2	65×25 2 1/2×1	76.1×33.7 3.000×1.315		38 1.50	136 5.35	72 2.83	69 2.72	49 1.93	3/8*55-2
50×32 2×1 1/4	60.3×42.4 2.375×1.660		46 1.81	118 4.64	75 2.95	60 2.56	40 1.57	3/8*55-2	65×32 2 1/2×1 1/4	76.1×42.4 3.000×1.660		46 1.81	136 5.35	81 3.18	71 2.72	49 1.93	3/8*55-2
50×40 2×1 1/2	60.3×48.3 2.375×1.900		46 1.81	118 4.64	75 2.95	63 2.56	40 1.57	3/8*55-2	65×40 2 1/2×1 1/2	76.1×48.3 3.000×1.900		53 2.08	136 5.35	86 3.38	71 2.72	49. 1.93	3/8*55-2
65×15 2 1/2×1/2	73.0×21.3 2.875×0.825		30 1.18	144 5.66	71 2.80	66 2.72	49 1.93	3/8*55-2	80×15 3×1/2	88.9×21.3 3.500×0.825		30 1.18	152 5.98	72.5 2.85	74 3.15	56.5 2.22	3/8*55-2
65×20 2 1/2×3/4	73.0×26.9 2.875×1.050		30 1.18	144 5.66	71 2.80	66 2.72	49 1.93	3/8*55-2	80×20 3×3/4	88.9×26.9 3.500×1.050		30 1.18	152 5.98	72.5 2.85	74 3.15	56.5 2.22	3/8*55-2
65×25 2 1/2×1	73.0×33.7 2.875×1.315		38 1.50	133 5.23	72 2.83	67 2.72	47 1.85	3/8*55-2	80×25 3×1	88.9×33.7 3.500×1.315		38 1.50	150 5.98	73 2.87	75 3.15	56 2.20	3/8*55-2
65×32 2 1/2×1 1/4	73.0×42.4 2.875×1.660		46 1.81	133 523	81 3.18	69 2.87	47 1.85	3/8*55-2	80×32 3×1 1/4	88.9×42.4 3.500×1.660		46 1.81	150 5.98	82 3.22	77 3.15	56 2.20	3/8*55-2
65×40 2 1/2×1 1/2	73.0×48.3 2.875×1.900		53 2.08	133 5.23	86 3.38	69 2.87	47 1.85	3/8*55-2	80×40 3×1 1/2	88.9×48.3 3.500×1.900		53 2.08	150 5.90	87 3.42	77 3.15	56 2.20	3/8*55-2

螺纹式机械三通
Mechanical Tee
Threaded outlet
XGQT3S

Nominal Size mm/in 规格	Pipe OD. mm/in 管子基本尺寸	Working Pressure psi/MPa 工作压力	Hole Dia. Mm/in +1.6,0/+0.063,0 开孔尺寸	Dimensions mm/in A	B	C	D	Bolt Size 螺栓规格	Nominal Size mm/in 规格	Pipe OD. mm/in 管子基本尺寸	Working Pressure psi/MPa 工作压力	Hole Dia. Mm/in +1.6,0/+0.063,0 开孔尺寸	Dimensions mm/in A	B	C	D	Bolt Size 螺栓规格
80×50 3×2	88.9×60.3 3.500×2.375	300psi 2.07MPa	61 2.40	150 5.90	100 3.93	81 3.15	56 2.20	3/8*55-2	100×50 4×2	114.3×60.3 4.500×2.375	300psi 2.07MPa	61 2.40	182 7.16	100 3.93	95 3.62	70 2.76	1/2*65-2
100×25 4×1	108.0×33.7 4.250×1.315		38 1.50	172 6.77	78.5 3.09	87 3.43	64.5 2.54	1/2*65-2	100×65 4×21/2	114.3×73.0 4.500×2.875		81 3.18	182 7.16	118 4.64	94 4.02	70 2.76	1/2*65-2
100×32 4×11/4	108.0×42.4 4.250×1.660		46 1.81	172 6.77	89 3.50	87 3.43	64.5 2.54	1/2*65-2	100×65 4×21/2	114.3×76.1 4.500×3.000		81 3.18	182 7.16	118 4.64	94 4.02	70 2.76	1/2*65-2
100×40 4×11/2	108.0×48.3 4.250×1.900		53 2.08	172 6.77	89 3.50	87 3.43	64.5 2.54	1/2*65-2	100×80 4×3	114.3×88.9 4.500×3.500		86 3.38	182 7.16	124 4.88	100 4.02	70 2.76	1/2*65-2
100×50 4×2	108.0×60.3 4.250×2.375		61 2.40	172 6.77	106.5 4.19	92 3.62	64.5 2.54	1/2*65-2	125×25 5×1	133.0×33.7 5.250×1.315		38 1.50	208 8.18	74 2.91	100 4.13	79 3.11	1/2*75-2
100×65 4×21/2	108.0×76.1 4.250×3.000		81 3.18	172 6.77	106.5 4.19	96 3.78	64.5 2.54	1/2*65-2	125×32 5×11/4	133.0×42.4 5.250×1.660		46 1.81	208 8.18	83 3.26	101 4.13	79 3.11	1/2*75-2
100×80 4×3	108.0×88.9 4.250×3.500		86 3.38	172 6.77	106.5 4.19	100 3.94	64.5 2.54	1/2*65-2	125×40 5×11/2	133.0×48.3 5.250×1.900		53 2.08	208 8.18	88 3.46	101 4.13	79 3.11	1/2*75-2
100×25 4×1	114.3×33.7 4.500×1.315		38 1.50	182 7.16	73 2.87	89 3.66	70 2.76	1/2*65-2	125×50 5×2	133.0×60.3 5.250×2.375		61 2.40	208 8.18	102 4.01	105 4.33	79 3.11	1/2*75-2
100×32 4×11/4	114.3×42.4 4.500×1.660		46 1.81	182 7.16	82 3.22	90 3.74	70 2.76	1/2*65-2	125×65 5×21/2	133.0×76.1 5.250×3.000		81 3.18	208 8.18	119 4.68	103 4.53	79 3.11	1/2*75-2
100×40 4×11/2	114.3×48.3 4.500×1.900		53 2.08	182 7.16	87 3.42	90 3.82	70 2.76	1/2*65-2	125×80 5×3	133.0×88.9 5.250×3.500		86 3.38	208 8.18	134 5.27	110 4.65	79 3.11	1/2*75-2

注：产品尺寸可能会因技术原因有所改动，恕不另行通知，如有疑问请征询威斯盾集团技术部
Note: The measurements of products maybe changed for the technical reason without responsibility note, please feel free to contact technical Dept.

螺纹式机械三通
Mechanical Tee
Threaded outlet
XGQT3S

Nominal Size mm/in 规格	Pipe OD. mm/in 管子基本尺寸	Working Pressure psi/MPa 工作压力	Hole Dia. Mm/in +1.6,0/+0.063,0 开孔尺寸	Dimensions mm/in A	B	C	D	Bolt Size 螺栓规格	Nominal Size mm/in 规格	Pipe OD. mm/in 管子基本尺寸	Working Pressure psi/MPa 工作压力	Hole Dia. Mm/in +1.6,0/+0.063,0 开孔尺寸	Dimensions mm/in A	B	C	D	Bolt Size 螺栓规格
125×25 5×1	139.7×33.7 5.500×1.315	300psi 2.07MPa	38 1.50	215 8.46	74 2.91	103 4.33	83 3.26	1/2*75-2	150×40 6×1 1/2	165.1×48.3 6.500×1.900	300psi 2.07MPa	53 2.08	240 9.44	88 3.46	118 4.65	97.5 3.84	9/16*75-2
125×32 5×1 1/4	139.7×42.4 5.500×1.660		46 1.81	215 8.46	83 3.26	104 4.41	83 3.26	1/2*75-2	150×50 6×2	165.1×60.3 6.500×2.375		61 2.40	240 9.44	102 4.01	120 5.43	96 3.77	9/16*75-2
125×40 5×1 1/2	139.7×48.3 5.500×1.900		53 2.08	215 8.46	88 3.46	104 4.41	83 3.26	1/2*75-2	150×65 6×2 1/2	165.1×76.1 6.500×3.000		81 3.18	240 9.44	119 4.68	121 5.43	96 3.77	9/16*75-2
125×50 5×2	139.7×60.3 5.500×2.375		61 2.40	215 8.46	102 4.01	108 4.53	83 3.26	1/2*75-2	150×80 6×3	165.1×88.9 6.500×3.500		86 3.38	240 9.44	134 5.27	126 5.43	96 377	9/16*75-2
125×65 5×2 1/2	139.7×76.1 5.500×3.000		81 3.18	215 8.46	119 4.68	108 453	83 3.26	1/2*75-2	150×100 6×4	165.1×114.3 6.500×4.500		114 4.48	240 9.44	158 6.22	132 5.32	96 3.77	9/16*75-2
125×80 5×3	139.7×88.9 5.500×3.500		86 3.38	215 8.46	134 5.27	113 4.72	83 3.26	1/2*75-2	150×25 6×1	168.3×33.7 6.625×1.315		38 1.50	244 9.60	74 2.91	119 5.12	97 3.81	9/16*75-2
125×25 5×1	141.3×33.7 5.563×1.315		38 1.50	215 8.46	74 2.91	103 4.33	84 3.31	1/2*75-2	150×32 6×1 1/4	168.3×42.4 6.625×1.660		46 1.81	244 9.60	83 3.26	120 512	98.5 3.88	9/16*75-2
125×32 5×1 1/4	141.3×42.4 5.563×1.660		46 1.81	215 8.46	83 3.26	104 4.41	84 3.31	1/2*75-2	150×40 6×1 1/2	168.3×48.3 6.625×1.900		53 2.08	244 9.60	88 3.46	120 4.80	98.5 3.88	9/16*75-2
125×40 5×1 1/2	141.3×48.3 5.563×1.900		53 2.00	215 8.46	88 3.46	104 4.41	84 3.31	1/2*75-2	150×50 6×2	168.3×60.3 6.625×2.375		61 2.40	244 9.60	102 4.01	122 5.20	97 3.81	9/16*75-2
125×50 5×2	141.3×60.3 5.563×2.375		61 2.40	215 8.46	102 4.01	108 4.53	83 3.26	1/2*75-2	150×65 6×2 1/2	168.3×73.0 6.625×2.875		81 3.18	244 9.60	119 4.68	123 5.20	97 3.81	9/16*75-2
125×65 5×2 1/2	141.3×76.1 5.563×3.000		81 3.18	215 8.46	119 4.64	108 4.53	83 3.26	1/2*75-2	150×65 6×2 1/2	168.3×76.1 6.625×3.000		81 3.18	244 9.60	119 4.68	123 5.20	97 3.81	9/16*75-2
125×80 5×3	141.3×88.9 5.563×3.500		86 3.38	215 8.46	134 5.27	114 4.72	83 3.26	1/2*75-2	150×80 6×3	168.3×88.9 6.625×3.500		86 3.38	244 9.60	134 5.27	128 5.51	97 3.81	9/16*75-2
150×25 6×1	159.0×33.7 6.250×1.315		38 1.50	244 9.60	78 3.07	116 4.57	94 3.70	9/16*75-2	150×100 6×4	168.3×114.3 6.625×4.500		114 4.48	244 9.60	158 6.22	134 5.51	97 3.81	9/16*75-2
150×32 6×1 1/4	159.0×42.4 6.250×1.660		46 1.81	244 9.60	93 3.66	118 4.65	94 3.70	9/16*75-2	200×25 8×1	219.1×33.7 8.625×1.315		38 1.50	308 12.12	74 2.91	145 5.91	124 4.88	5/8*95-2
150×40 6×1 1/2	159.0×48.3 6.250×1.900		53 2.08	244 9.60	93 3.66	118 4.65	94 3.70	9/16*75-2	200×32 8×1 1/4	219.1×42.4 8.625×1.660		46 1.81	308 12.12	83 3.26	146 5.91	124 4.88	5/8*95-2
150×50 6×2	159.0×60.3 6.250×2.375		61 2.40	230 9.05	98 3.85	115 4.53	90 3.54	9/16*75-2	200×40 8×1 1/2	219.1×48.3 8.625×1.g00		53 2.08	308 12.12	88 3.46	146 5.91	124 4.88	5/8*95-2
150×65 6×2 1/2	159.0×76.1 6.250×3.000		81 3.18	230 9.05	121 4.76	125 4.92	90 3.54	9/16*75-2	200×50 8×2	219.1×60.3 8.625×2.375		61 2.40	308 12.12	102 4.01	149 6.30	124 488	5/8*95-2
150×80 6×3	159.0×88.9 6.250×3.500		86 3.38	230 9.05	134 5.27	125 4.92	90 3.54	9/16*75-2	200×65 8×2 1/2	219.1×76.1 8.625×3.000		81 3.18	308 12.12	119 4.68	149 6.24	124 4.88	5/8*95-2
150×100 6×4	159.0×114.3 6.250×4.500		114 4.48	230 9.05	155 6.10	130 5.12	90 3.54	9/16*75-2	200×80 8×3	219.1×88.9 8.625×3.500		86 3.38	308 12.12	134 5.27	154 6.30	124 4.88	5/8*95-2
150×25 6×1	165.1×33.7 6.500×1.315		38 1.50	240 9.44	74 2.91	117 465	96 3.77	9/16*75-2	200×100 8×4	219.1×114.3 8.625×4.500		114 4.48	308 12.12	158 6.22	159 630	124 4.88	5/8*95-2
150×32 6×1 1/4	165.1×42.4 6.500×1.660		46 1.81	240 9.44	83 3.26	118 4.65	97.5 3.84	9/16*75-2									

注：产品尺寸可能会因技术原因有所改动，恕不另行通知，如有疑问请征询威斯盾集团技术部
Note: The measurements of products maybe changed for the technical reason without responsibility note, please feel free to contact technical Dept.

Grooved Flange ANSI Class 150 沟槽法兰

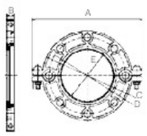

沟槽法兰
Grooved flange
XGQT09

Nominal Size mm/in	Pipe OD. mm/in	Working Pressure psi/MPa	Dimensions mm/in					Bolt Size	
			A mm/in	B mm/in	C mm/in	D mm/in	E mm/in	No.–Size mm/in	
规格	管子基本尺寸	工作压力	尺寸					螺栓	
50 2	60.3 2.375	300psi 2.07MPa	206 8.11	19 0.74	152 5.98	121 4.76	57.5 2.26	M10*50–2	5/8–4
65 21/2	73 2.875		230 9.05	19 0.74	178 7.00	140 5.51	69.0 2.71	M10*50–2	5/8–4
80 3	88.9 3.5		244 9.60	19 0.74	191 7.52	152 5.98	85.0 3.34	M10*50–2	5/8–4
100 4	114.3 4.5		280 11.02	19 0.74	229 9.00	191 7.52	110.5 4.35	M12*55–2	5/8–8
125 5	141.3 5.563		322 12.67	22 0.86	250 9.84	216 8.50	137.0 5.39	M12*65–2	3/4–8
150 6	168.3 6.625		346 13.62	22 0.86	285 11.22	241.5 9.50	164.0 6.45	M12*65–2	3/4–8
200 8	219.1 8.625		410 16.14	24 0.94	340.0 13.38	298.5 11.75	214.0 8.42	3/8*70–2	3/4–8
250 10	273 10.75		478.0 18.81	25 0.98	405.6 15.97	362.0 14.25	268.0 10.55	3/8*70–2	7/8–12

Grooved Flange PN 16 沟槽法兰

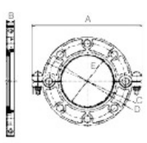

沟槽法兰
Grooved flange
XGQT09

Nominal Size mm/in	Pipe OD. mm/in	Working Pressure psi/MPa	Dimensions mm/in					Bolt Size	
			A mm/in	B mm/in	C mm/in	D mm/in	E mm/in	No.–Size mm/in	
规格	管子基本尺寸	工作压力	尺寸					螺栓	
50 2	60.3 2.375	232psi 1.6MPa	215 8.46	24 0.95	160 6.29	125 4.92	57.5 2.26	M10*50–2	4–M16
65 21/2	73 2.875		240 9.44	24 0.95	176 6.92	145 5.71	69.8 2.74	M10*50–2	4–M16
65 21/2	76.1 3		240 9.44	24 0.95	176 6.92	145 5.71	72.7 2.86	M10*50–2	4–M16
80 3	88.9 3.5		250 9.84	24 0.95	184 7.24	160 6.30	85.5 3.37	M10*50–2	8–M16
100 4	108 4.25		266 10.47	24 0.95	218 8.58	180 7.09	104.5 4.11	M12*55–2	8–M16
100 4	114.3 4.5		266 10.47	24 0.95	218 8.58	180 7.09	110.5 4.35	M12*55–2	8–M16
125 5	133 5.25		300 11.81	24 0.95	247 9.72	210 8.27	129.2 5.08	M12*65–2	8–M16
125 5	139.7 5.5		300 11.81	24 0.95	247 9.72	210 8.27	135.5 5.33	M12*65–2	8–M16
125 5	141.3 5.563		300 11.81	24 0.95	247 9.72	210 8.27	137.4 5.41	M12*65–2	8–M16
150 6	159 6.25		336 13.22	24 0.95	282 11.10	240 9.45	154.5 6.08	M12*65–2	8–M20
150 6	165.1 6.5		336 13.22	24 0.95	282 11.10	240 9.45	163.5 6.43	M12*65–2	8–M20
150 6	168.3 6.625		336 13.22	24 0.95	282 11.10	240 9.45	163.5 6.43	M12*65–2	8–M20
200 8	219.1 8.625		395 15.55	27 1.06	335 13.18	295 11.61	214.5 8.44	3/8*70–2	12–M20
250 10	273 10.75		470 18.50	27 1.06	404 15.90	355 13.97	267 10.51	3/8*70–2	12–M24

注：产品尺寸可能会因技术原因有所改动，恕不另行通知，如有疑问请征询威斯盾集团技术部
Note: The measurements of products maybe changed for the technical reason without responsibility note, please feel free to contact technical Dept.

90°弯头
90° Elbow
XGQT01

Nominal Size mm/in	Pipe OD. mm/in	Working Pressure psi/MPa	Dimensions L mm/in
规格	管子基本尺寸	工作压力	尺寸
25 1	33.7 1.327	300psi 2.07MPa	57 2.24
32 1 1/4	42.4 1.669		60 2.36
40 1 1/2	48.3 1.9		60 2.36
50 2	60.3 2.375		70 2.75
65 2 1/2	73 2.875		76 3.00
65 2 1/2	76.1 3		76 3.00
80 3	88.9 3.5		86 3.38
100 4	108 4.25		101 3.98
100 4	114.3 4.5		101 3.98
125 5	133 5.25		121 4.76
125 5	139.7 5.5		121 4.76
125 5	141.3 5.563		121 4.76
150 6	159 6.25		140 5.51
150 6	165.1 6.5		140 5.51
150 6	168.3 6.625		140 5.51
200 8	219.1 8.625		175 6.88
250 10	273 10.75		188.5 7.42
300 12	323.9 12.750		222.5 8.76

45°弯头
45° Elbow
XGQT02

Nominal Size mm/in	Pipe OD. mm/in	Working Pressure psi/MPa	Dimensions L mm/in
规格	管子基本尺寸	工作压力	尺寸
25 1	33.7 1.327	300psi 2.07MPa	45 1.77
32 1 1/4	42.4 1.669		45 1.77
40 1 1/2	48.3 1.9		45 1.77
50 2	60.3 2.375		51 2.00
65 2 1/2	73 2.875		57 2.24
65 2 1/2	76.1 3		57 2.24
80 3	88.9 3.5		64 2.51
100 4	108 4.25		76 3.00
100 4	114.3 4.5		76 3.00
125 5	133 5.25		82.5 3.24
125 5	139.7 5.5		82.5 3.24
125 5	141.3 5.563		82.5 3.24
150 6	159 6.25		89 3.50
150 6	165.1 6.5		89 3.50
150 6	168.3 6.625		89 3.50
200 8	219.1 8.625		108 4.25
250 10	273 10.75		120.5 4.74
300 12	323.9 12.750		133 5.23

注：产品尺寸可能会因技术原因有所改动，恕不另行通知，如有疑问请征询威斯盾集团技术部
Note: The measurements of products maybe changed for the technical reason without responsibility note, please feel free to contact technical Dept.

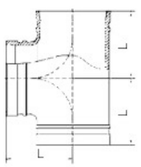

正三通
Tee
XGQT03

Nominal Size mm/in 规格	Pipe OD. mm/in 管子基本尺寸	Working Pressure psi/MPa 工作压力	Dimensions L mm/in 尺寸
25 1	33.7 1.327	300psi 2.07MPa	57 2.24
32 1 1/4	42.4 1.669		60 2.36
40 1 1/2	48.3 1.9		60 2.36
50 2	60.3 2.375		70 2.75
65 2 1/2	73 2.875		76 3.00
65 2 1/2	76.1 3		76 3.00
80 3	88.9 3.5		86 3.38
100 4	108 4.25		101 3.98
100 4	114.3 4.5		101 3.98
125 5	133 5.25		121 4.76
125 5	139.7 5.5		121 4.76
125 5	141.3 5.563		121 4.76
150 6	159 6.25		140 5.51
150 6	165.1 6.5		140 5.51
150 6	168.3 6.625		140 5.51
200 8	219.1 8.625		175 6.88
250 10	273 10.75		215 8.46
300 12	323.9 12.750		245 9.64

注：产品尺寸可能会因技术原因有所改动，恕不另行通知，如有疑问请征询威斯盾集团技术部
Note: The measurements of products maybe changed for the technical reason without responsibility note, please feel free to contact technical Dept.

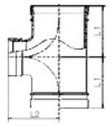

沟槽式异径三通
Grooved Reducing Tee
XGQT04

Nominal Size mm/in 规格	Pipe OD. mm/in 管子基本尺寸	Working Pressure psi/MPa 工作压力	Dimensions L1 mm/in 尺寸	Dimensions L2 mm/in 尺寸
50 × 25 2 × 1	60.3 × 33.7 2.375 × 1.315	300psi 2.07MPa	70 2.75	70 2.75
50 × 32 2 × 1 1/4	60.3 × 42.4 2.375 × 1.660		70 2.75	70 2.75
50 × 40 2 × 1 1/2	60.3 × 48.3 2.375 × 1.900		70 2.75	70 2.75
65 × 32 2 1/2 × 1 1/4	73.0 × 42.4 2.875 × 1.660		76 3.00	76 3.00
65 × 40 2 1/2 × 1 1/2	73.0 × 48.3 2.875 × 1.900		76 3.00	76 3.00
65 × 50 2 1/2 × 2	73.0 × 60.3 2.875 × 2.375		76 3.00	76 3.00
65 × 32 2 1/2 × 1 1/4	76.1 × 42.4 3.000 × 1.660		76 3.00	76 3.00
65 × 40 2 1/2 × 1 1/2	76.1 × 48.3 3.000 × 1.900		76 3.00	76 3.00
65 × 50 2 1/2 × 2	76.1 × 60.3 3.000 × 2.375		76 3.00	76 3.00
80 × 40 3 × 1 1/2	88.9 × 48.3 3.500 × 1.900		86 3.38	86 3.38
80 × 50 3 × 2	88.9 × 60.3 3.500 × 2.375		86 3.38	86 3.38
80 × 65 3 × 2 1/2	88.9 × 76.1 3.500 × 3.000		86 3.38	86 3.38
100 × 65 4 × 2 1/2	108.0 × 76.1 4.250 × 3.000		101 3.98	101 3.98
100 × 80 4 × 3	108.0 × 88.9 4.250 × 3.500		101 3.98	101 3.98
100 × 50 4 × 2	114.3 × 60.3 4.500 × 2.375		101 3.98	101 3.98
100 × 65 4 × 2 1/2	114.3 × 76.1 4.500 × 3.000		101 3.98	101 3.98
100 × 80 4 × 3	114.3 × 88.9 4.500 × 3.500		101 3.98	101 3.98
125 × 50 5 × 2	133.0 × 60.3 5.250 × 2.375		121 4.76	121 4.76
125 × 65 5 × 2 1/2	133.0 × 76.1 5.250 × 3.000		121 4.76	121 4.76
125 × 100 5 × 4	133.0 × 108.0 5.250 × 4.250		121 4.76	121 4.76
125 × 100 5 × 4	133.0 × 114.3 5.250 × 4.500		121 4.76	121 4.76
125 × 50 5 × 2	139.7 × 60.3 5.500 × 2.375		121 4.76	121 4.76
125 × 65 5 × 2 1/2	139.7 × 76.1 5.500 × 3.000		121 4.76	121 4.76
125 × 80 5 × 3	139.7 × 88.9 5.500 × 3.500		121 4.76	121 4.76
125 × 100 5 × 4	139.7 × 114.3 5.500 × 4.500		121 4.76	121 4.76
125 × 50 5 × 2	141.3 × 60.3 5.563 × 2.375		121 4.76	121 4.76
125 × 65 5 × 2 1/2	141.3 × 73.0 5.563 × 2.875		121 4.76	121 4.76

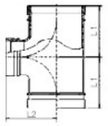

沟槽式异径三通
Grooved Reducing Tee
XGQT04

Nominal Size mm/in 规格	Pipe OD. mm/in 管子基本尺寸	Working Pressure psi/MPa 工作压力	Dimensions L1 mm/in 尺寸	Dimensions L2 mm/in 尺寸
125 × 65 5 × 2 1/2	141.3 × 76.1 5.563 × 3.000	300psi 2.07MPa	121 4.76	121 4.76
125 × 80 5 × 3	141.3 × 88.9 5.563 × 3.500		121 4.76	121 4.76
125 × 100 5 × 4	141.3 × 114.3 5.563 × 4.500		121 4.76	121 4.76
150 × 65 6 × 2 1/2	159.0 × 76.1 6.250 × 3.000		140 5.50	140 5.50
150 × 80 6 × 3	159.0 × 88.9 6.250 × 3.500		140 5.50	140 5.50
150 × 100 6 × 4	159.0 × 108.0 6.250 × 4.250		140 5.50	140 5.50
150 × 100 6 × 4	159.0 × 114.3 6.250 × 4.500		140 5.50	140 5.50
150 × 50 6 × 2	165.1 × 60.3 6.500 × 2.375		140 5.50	140 5.50
150 × 65 6 × 2 1/2	165.1 × 76.1 6.500 × 3.000		140 5.50	140 5.50
150 × 80 6 × 3	165.1 × 88.9 6.500 × 3.500		140 5.50	140 5.50
150 × 100 6 × 4	165.1 × 114.3 6.500 × 4.500		140 5.50	140 5.50
150 × 125 6 × 5	165.1 × 139.7 6.500 × 5.500		140 5.50	140 5.50
150 × 50 6 × 2	168.3 × 60.3 6.625 × 2.375		140 5.50	140 5.50
150 × 65 6 × 2 1/2	168.3 × 76.1 6.625 × 3.000		140 5.50	140 5.50
150 × 80 6 × 3	168.3 × 88.9 6.625 × 3.500		140 5.50	140 5.50
200 × 65 8 × 2 1/2	219.1 × 76.1 8.625 × 3.000		175 6.88	175 6.88
200 × 80 8 × 3	219.1 × 88.9 8.625 × 3.500		175 6.88	175 6.88
200 × 100 8 × 4	219.1 × 108.0 8.625 × 4.250		175 6.88	175 6.88
200 × 100 8 × 4	219.1 × 114.3 8.625 × 4.500		175 6.88	175 6.88
200 × 125 8 × 5	219.1 × 139.7 8.625 × 5.500		175 6.88	175 6.88
200 × 150 8 × 6	219.1 × 159.0 8.625 × 6.250		175 6.88	175 6.88
200 × 150 8 × 6	219.1 × 165.1 8.625 × 6.500		175 6.88	175 6.88
200 × 150 8 × 6	219.1 × 168.3 8.625 × 6.625		175 6.88	175 6.88
250 × 100 10 × 4	273.0 × 114.3 10.750 × 4.500		215 8.46	215 8.46
250 × 125 10 × 5	273.0 × 139.7 10.750 × 5.500		215 8.46	215 8.46
250 × 150 10 × 6	273.0 × 165.1 10.750 × 6.500		215 8.46	215 8.46

注：产品尺寸可能会因技术原因有所改动，恕不另行通知，如有疑问请征询威斯盾集团技术部
Note: The measurements of products maybe changed for the technical reason without responsibility note, please feel free to contact technical Dept.

Threaded reducing tee

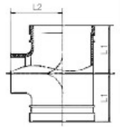

螺纹式异径三通
Threaded
Reducing Tee
XGQT04S

Nominal Size mm/in	Pipe OD. mm/in	Working Pressure psi/MPa	Dimensions L1 mm/in	Dimensions L2 mm/in
规格	管子基本尺寸	工作压力	尺寸	尺寸
40 × 25 1 1/2 × 1	48.3 × 33.7 1.900 × 1.315		60 2.36	60 2.36
40 × 32 1 1/2 × 1 1/4	48.3 × 42.4 1.900 × 1.660		60 2.36	60 2.36
50 × 25 2 × 1	60.3 × 33.7 2.375 × 1.315		70 2.75	70 2.75
50 × 32 2 × 1 1/4	60.3 × 42.4 2.375 × 1.660		70 2.75	70 2.75
50 × 40 2 × 1 1/2	60.3 × 48.3 2.375 × 1.900		70 2.75	70 2.75
65 × 25 2 1/2 × 1	73.0 × 33.7 2.875 × 1.315		76 3.00	76 3.00
65 × 32 2 1/2 × 1 1/4	73.0 × 42.4 2.875 × 1.660		76 3.00	76 3.00
65 × 40 2 1/2 × 1 1/2	73.0 × 48.3 2.875 × 1.900		76 3.00	76 3.00
65 × 50 2 1/2 × 2	73.0 × 60.3 2.875 × 2.375		76 3.00	76 3.00
65 × 25 2 1/2 × 1	76.1 × 33.7 3.000 × 1.315		76 3.00	76 3.00
65 × 32 2 1/2 × 1 1/4	76.1 × 42.4 3.000 × 1.660		76 3.00	76 3.00
65 × 40 2 1/2 × 1 1/2	76.1 × 48.3 3.000 × 1.900		76 3.00	76 3.00
65 × 50 2 1/2 × 2	76.1 × 60.3 3.000 × 2.375		76 3.00	76 3.00
80 × 25 3 × 1	88.9 × 33.7 3.500 × 1.315	300psi 2.07MPa	86 3.38	86 3.38
80 × 32 3 × 1 1/4	88.9 × 42.4 3.500 × 1.660		86 3.38	86 3.38
80 × 40 3 × 1 1/2	88.9 × 48.3 3.500 × 1.900		86 3.38	86 3.38
80 × 50 3 × 2	88.9 × 60.3 3.500 × 2.375		86 3.38	86 3.38
80 × 65 3 × 2 1/2	88.9 × 76.1 3.500 × 3.000		86 3.38	86 3.38
100 × 65 4 × 2 1/2	108.0 × 76.1 4.250 × 3.000		101 3.98	101 3.98
100 × 80 4 × 3	108.0 × 88.9 4.250 × 3.500		101 3.98	101 3.98
100 × 25 4 × 1	114.3 × 33.7 4.500 × 1.315		101 3.98	101 3.98
100 × 32 4 × 1 1/2	114.3 × 42.4 4.500 × 1.660		101 3.98	101 3.98
100 × 40 4 × 1 1/2	114.3 × 48.3 4.500 × 1.900		101 3.98	101 3.98
100 × 50 4 × 2	114.3 × 60.3 4.500 × 2.375		101 3.98	101 3.98
100 × 65 4 × 2 1/2	114.3 × 76.1 4.500 × 3.000		101 3.98	101 3.98
100 × 80 4 × 3	114.3 × 88.9 4.500 × 3.500		101 3.98	101 3.98
125 × 25 5 × 1	139.7 × 33.7 5.500 × 1.315		121 4.76	121 4.76

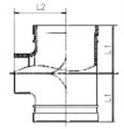

螺纹式异径三通
Threaded
Reducing Tee
XGQT04S

Nominal Size mm/in	Pipe OD. mm/in	Working Pressure psi/MPa	Dimensions L1 mm/in	Dimensions L2 mm/in
规格	管子基本尺寸	工作压力	尺寸	尺寸
125 × 32 5 × 1 1/4	139.7 × 42.4 5.500 × 1.660		121 4.76	121 4.76
125 × 40 5 × 1 1/2	139.7 × 48.3 5.500 × 1.900		121 4.76	121 4.76
125 × 50 5 × 2	139.7 × 60.3 5.500 × 2.375		121 4.76	121 4.76
125 × 65 5 × 2 1/2	139.7 × 76.1 5.500 × 3.000		121 4.76	121 4.76
125 × 80 5 × 3	139.7 × 88.9 5.500 × 3.500		121 4.76	121 4.76
125 × 25 5 × 1	141.3 × 33.7 5.563 × 1.315		121 4.76	121 4.76
125 × 32 5 × 1 1/4	141.3 × 42.4 5.563 × 1.660		121 4.76	121 4.76
125 × 40 5 × 1 1/2	141.3 × 48.3 5.563 × 1.900		121 4.76	121 4.76
125 × 50 5 × 2	141.3 × 60.3 5.563 × 2.375		121 4.76	121 4.76
125 × 65 5 × 2 1/2	141.3 × 73.0 5.563 × 2.875		121 4.76	121 4.76
125 × 65 5 × 2 1/2	141.3 × 76.1 5.563 × 3.000		121 4.76	121 4.76
150 × 65 6 × 2 1/2	159.0 × 76.1 6.250 × 3.000		140 5.50	140 5.50
150 × 80 6 × 3	159.0 × 88.9 6.250 × 3.500		140 5.50	140 5.50
150 × 25 6 × 1	165.1 × 33.7 6.500 × 1.315		140 5.50	140 5.50
150 × 32 6 × 1 1/4	165.1 × 42.4 6.500 × 1.660		140 5.50	140 5.50
150 × 40 6 × 1 1/2	165.1 × 48.3 6.500 × 1.900		140 5.50	140 5.50
150 × 50 6 × 2	165.1 × 60.3 6.500 × 2.375		140 5.50	140 5.50
150 × 65 6 × 2 1/2	165.1 × 76.1 6.500 × 3.000		140 5.50	140 5.50
150 × 80 6 × 3	165.1 × 88.9 6.500 × 3.500		140 5.50	140 5.50
150 × 100 6 × 4	165.1 × 114.3 6.500 × 4.500		140 5.50	140 5.50
150 × 25 6 × 1	168.3 × 33.7 6.625 × 1.315		140 5.50	140 5.50
150 × 32 6 × 1 1/4	168.3 × 42.4 6.625 × 1.660		140 5.50	140 5.50
150 × 40 6 × 1 1/2	168.3 × 48.3 6.625 × 1.900		140 5.50	140 5.50
150 × 50 6 × 2	168.3 × 60.3 6.625 × 2.375		140 5.50	140 5.50
200 × 50 8 × 2	219.1 × 60.3 8.625 × 2.375		175 6.88	175 6.88
200 × 65 8 × 2 1/2	219.1 × 76.1 8.625 × 3.000		175 6.88	175 6.88
200 × 80 8 × 3	219.1 × 88.9 8.625 × 3.500		175 6.88	175 6.88

注：产品尺寸可能会因技术原因有所改动，恕不另行通知，如有疑问请征询威斯盾集团技术部
Note: The measurements of products maybe changed for the technical reason without responsibility note, please feel free to contact technical Dept.

Cross

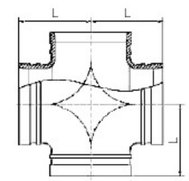

正四通
Cross
XGQT05

Nominal Size mm/in	Pipe OD. mm/in	Working Pressure psi/MPa	Dimensions L mm/in
规格	管子基本尺寸	工作压力	尺寸
32 1 1/4	42.4 1.669		60 2.36
40 1 1/2	48.3 1.9		60 2.36
50 2	60.3 2.375		70 2.75
65 2 1/2	73 2.875		76 3.00
65 2 1/2	76.1 3		76 3.00
80 3	88.9 3.5		86 3.38
100 4	108 4.25		101 3.98
100 4	114.3 4.5		101 3.98
125 5	133 5.25	300psi 2.07MPa	121 4.76
125 5	139.7 5.5		121 4.76
125 5	141.3 5.563		121 4.76
150 6	159 6.25		140 5.51
150 6	165.1 6.5		140 5.51
150 6	168.3 6.625		140 5.51
200 8	219.1 8.625		175 6.88
250 10	273 10.75		215 8.46
300 12	323.9 12.750		245 9.64

注：产品尺寸可能会因技术原因有所改动，恕不另行通知，如有疑问请征询威斯盾集团技术部
Note: The measurements of products maybe changed for the technical reason without responsibility note, please feel free to contact technical Dept.

Grooved/Threaded reducing Cross

沟槽式异径四通
Grooved
Reducing Cross
XGQT051

Nominal Size mm/in 规格	Pipe OD. mm/in 管子基本尺寸	Working Pressure psi/MPa 工作压力	Dimensions L1 mm/in 尺寸	Dimensions L2 mm/in 尺寸
100 × 50 4 × 2	114.3 × 60.3 4.500 × 2.375		101 3.98	101 3.98
100 × 65 4 × 2 1/2	114.3 × 76.1 4.500 × 3.000		101 3.98	101 3.98
100 × 80 4 × 3	114.3 × 88.9 5.563 × 3.500		101 3.98	101 3.98
125 × 100 5 × 4	139.7 × 114.3 5.500 × 4.500		121 4.76	121 4.76
150 × 100 6 × 4	165.1 × 114.3 6.500 × 4.500	300psi 2.07MPa	140 5.50	140 5.50
150 × 50 6 × 2	168.3 × 60.3 6.625 × 2.375		140 5.50	140 5.50
150 × 65 6 × 2 1/2	168.3 × 76.1 6.625 × 3.000		140 5.50	140 5.50
150 × 80 6 × 3	168.3 × 88.9 6.625 × 3.500		140 5.50	140 5.50
150 × 100 6 × 4	168.3 × 114.3 6.625 × 4.500		140 5.50	140 5.50

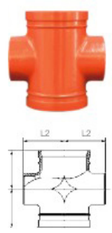

螺纹式异径四通
Threaded
Reducing Cross
XGQT051S

Nominal Size mm/in 规格	Pipe OD. mm/in 管子基本尺寸	Working Pressure psi/MPa 工作压力	Dimensions L1 mm/in 尺寸	Dimensions L2 mm/in 尺寸
100 × 25 4 × 1	114.3 × 33.7 4.500 × 1.315		101 3.98	101 3.98
100 × 32 4 × 1 1/4	114.3 × 42.4 4.500 × 1.660		101 3.98	101 3.98
100 × 40 4 × 1 1/2	114.3 × 48.3 4.500 × 1.900		101 3.98	101 3.98
100 × 50 4 × 2	114.3 × 60.3 4.500 × 2.375		101 3.98	101 3.98
100 × 65 4 × 2 1/2	114.3 × 76.1 4.500 × 3.000		101 3.98	101 3.98
100 × 80 4 × 3	114.3 × 88.9 4.500 × 3.500		101 3.98	101 3.98
125 × 32 5 × 1 1/4	139.7 × 42.4 5.500 × 1.660		121 4.76	121 4.76
125 × 40 5 × 1 1/2	139.7 × 48.3 5.500 × 1.900		121 4.76	121 4.76
125 × 50 5 × 2	139.7 × 60.3 5.500 × 2.375	300psi 2.07MPa	121 4.76	121 4.76
125 × 65 5 × 2 1/2	139.7 × 76.1 5.500 × 3,000		121 4.76	121 4.76
125 × 80 5 × 3	139.7 × 88.9 5.500 × 3.500		121 4.76	121 4.76
150 × 25 6 × 1	165.1 × 33.7 6.500 × 1.315		140 5.50	140 5.50
150 × 32 6 × 1 1/4	165.1 × 42.4 6.500 × 1.660		140 5.50	140 5.50
150 × 40 6 × 1 1/2	165.1 × 48.3 6.500 × 1.900		140 5.50	140 5.50
150 × 50 6 × 2	165.1 × 60.3 6.500 × 2.375		140 5.50	140 5.50
150 × 65 6 × 2 1/2	165.1 × 76.1 6.500 × 3.000		140 5.50	140 5.50
150 × 80 6 × 3	165.1 × 88.9 6.500 × 3.500		140 5.50	140 5.50

注：产品尺寸可能会因技术原因有所改动，恕不另行通知，如有疑问请征询威斯盾集团技术部
Note: The measurements of products maybe changed for the technical reason without responsibility note, please feel free to contact technical Dept.

Cap

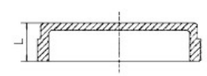

盲片
Cap
XGQT06

Nominal Size mm/in 规格	Pipe OD. mm/in 管子基本尺寸	Working Pressure psi/MPa 工作压力	Dimensions L mm/in 尺寸
25 1	33.7 1.327		25 0.98
32 11/4	42.4 1.669		25 0.98
40 11/2	48.3 1.9		25 0.98
50 2	60.3 2.375		25 0.98
65 21/2	73 2.875		25 0.98
65 21/2	76.1 3		25 0.98
80 3	88.9 3.5		26 10.2
100 4	108 4.25		26 10.2
100 4	114.3 4.5	300psi 2.07MPa	26 10.2
125 5	133 5.25		26 10.2
125 5	139.7 5.5		26 10.2
125 5	141.3 5.563		26 10.2
150 6	159 6.25		26 10.2
150 6	165.1 6.5		26 10.2
150 6	168.3 6.625		26 10.2
200 8	219.1 8.625		30 1.18
250 10	273 10.75		32 1.25
300 12	323.9 12.750		32 1.25

注：产品尺寸可能会因技术原因有所改动，恕不另行通知，如有疑问请征询威斯盾集团技术部
Note: The measurements of products maybe changed for the technical reason without responsibility note, please feel free to contact technical Dept.


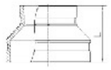

沟槽式大小头
Grooved Concentric Reducdr
XGQT07

Nominal Size mm/in 规格	Pipe OD. mm/in 管子基本尺寸	Working Pressure psi/MPa 工作压力	Dimensions L mm/in 尺寸
32 × 25 1¼ × 1	42.4 × 33.7 1.660 × 1.315	300psi 2.07MPa	64 2.51
40 × 25 1½ × 1	48.3 × 33.7 1.900 × 1.315		64 2.51
40 × 32 1½ × 1¼	48.3 × 42.4 1.900 × 1.660		64 2.51
50 × 25 2 × 1	60.3 × 33.7 2.375 × 1.315		64 2.51
50 × 32 2 × 1¼	60.3 × 42.4 2.375 × 1.660		64 2.51
50 × 40 2 × 1½	60.3 × 48.3 2.375 × 1.900		64 2.51
65 × 25 2½ × 1	73.0 × 33.7 2.875 × 1.315		64 2.51
65 × 32 2½ × 1¼	73.0 × 42.4 2.875 × 1.660		64 2.51
65 × 40 2½ × 1½	73.0 × 48.3 2.875 × 1.900		64 2.51
65 × 50 2½ × 2	73.0 × 60.3 2.875 × 2.375		64 2.51
65 × 32 2½ × 1¼	76.1 × 42.4 3.000 × 1.660		64 2.51
65 × 40 2½ × 1½	76.1 × 48.3 3.000 × 1.900		64 2.51
65 × 50 2½ × 2	76.1 × 60.3 3.000 × 2.375		64 2.51
80 × 32 3 × 1¼	88.9 × 42.4 3.500 × 1.660		64 2.51
80 × 40 3 × 1½	88.9 × 48.3 3.500 × 1.900		64 2.51
80 × 50 3 × 2	88.9 × 60.3 3.500 × 2.375		64 2.51
80 × 65 3 × 2½	88.9 × 76.1 3.500 × 3.000		64 2.51
100 × 65 4 × 2½	108.0 × 76.1 4.250 × 3.000		76 2.99
100 × 80 4 × 3	108.0 × 88.9 4.250 × 3.500		76 2.99
100 × 32 4 × 1¼	114.3 × 42.4 4.500 × 1.660		76 2.99


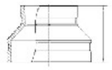

沟槽式大小头
Grooved Concentric Reducdr
XGQT07

Nominal Size mm/in 规格	Pipe OD. mm/in 管子基本尺寸	Working Pressure psi/MPa 工作压力	Dimensions L mm/in 尺寸
100 × 40 4 × 1½	114.3 × 48.3 4.500 × 1.900	300psi 2.07MPa	76 2.99
100 × 50 4 × 2	114.3 × 60.3 4.500 × 2.375		76 2.99
100 × 65 4 × 2½	114.3 × 76.1 4.500 × 3.000		76 2.99
100 × 80 4 × 3	114.3 × 88.9 4.500 × 3.500		76 2.99
125 × 50 5 × 2	139.7 × 60.3 5.500 × 2.375		89 3.50
125 × 65 5 × 2½	139.7 × 76.1 5.500 × 3.000		89 3.50
125 × 80 5 × 3	139.7 × 88.9 5.500 × 3.500		89 3.50
125 × 100 5 × 4	139.7 × 114.3 5.500 × 4.500		89 3.50
125 × 50 5 × 2	141.3 × 60.3 5.563 × 2.375		89 3.50
125 × 65 5 × 2½	141.3 × 76.1 5.563 × 3.000		89 3.50
125 × 80 5 × 3	141.3 × 88.9 5.563 × 3.500		89 3.50
125 × 100 5 × 4	141.3 × 114.3 5.563 × 4.500		89 3.50
150 × 50 6 × 2	159.0 × 60.3 6.250 × 2.375		102 4.01
150 × 65 6 × 2½	159.0 × 76.1 6.250 × 3.000		102 4.01
150 × 80 6 × 3	159.0 × 88.9 6.250 × 3.500		102 4.01
150 × 100 6 × 4	159.0 × 108.0 6.250 × 4.250		102 4.01
150 × 100 6 × 4	159.0 × 114.3 6.250 × 4.500		102 4.01
150 × 125 6 × 5	159.0 × 133.0 6.250 × 5.250		102 4.01
150 × 125 6 × 5	159.0 × 139.7 6.250 × 5.500		102 4.01
150 × 50 6 × 2	165.1 × 60.3 6.500 × 2.375		102 4.01

注：产品尺寸可能会因技术原因有所改动，恕不另行通知，如有疑问请征询威斯盾集团技术部
Note: The measurements of products maybe changed for the technical reason without responsibility note, please feel free to contact technical Dept.


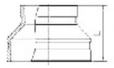

沟槽式大小头
Grooved Concentric Reducdr
XGQT07

Nominal Size mm/in 规格	Pipe OD. mm/in 管子基本尺寸	Working Pressure psi/MPa 工作压力	Dimensions L mm/in 尺寸
150 × 65 6 × 21/2	165.1 × 76.1 6.500 × 3.000	300psi 2.07MPa	102 4.01
150 × 80 6 × 3	165.1 × 88.9 6.500 × 3.500		102 4.01
150 × 100 6 × 4	165.1 × 114.3 6.500 × 4.500		102 4.01
150 × 125 6 × 5	165.1 × 139.7 6.500 × 5.500		102 4.01
150 × 50 6 × 2	168.3 × 60.3 6.625 × 2.375		102 4.01
150 × 65 6 × 21/2	168.3 × 76.1 6.625 × 3.000		102 4.01
150 × 80 6 × 3	168.3 × 88.9 6.625 × 3.500		102 4.01
150 × 100 6 × 4	168.3 × 114.3 6.625 × 4.500		102 4.01
150 × 80 6 × 5	168.3 × 139.7 6.625 × 5.500		102 4.01
200 × 50 8 × 2	219.1 × 60.3 8.625 × 2.375		127 5
200 × 65 8 × 21/2	219.1 × 76.1 8.625 × 3.000		127 5
200 × 80 8 × 3	219.1 × 88.9 8.625 × 3.500		127 5
200 × 100 8 × 4	219.1 × 108.0 8.625 × 4.250		127 5
200 × 100 8 × 4	219.1 × 114.3 8.625 × 4.500		127 5
200 × 125 8 × 5	219.1 × 139.7 8.625 × 5.500		127 5
200 × 150 8 × 6	219.1 × 159.0 8.625 × 6.250		127 5
200 × 150 8 × 6	219.1 × 165.1 8.625 × 6.500		127 5
200 × 150 8 × 6	219.1 × 168.3 8.625 × 6.625		127 5


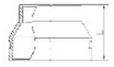

螺纹式大小头
Threaded Concentric Reducdr
XGQT07S

Nominal Size mm/in 规格	Pipe OD. mm/in 管子基本尺寸	Working Pressure psi/MPa 工作压力	Dimensions L mm/in 尺寸
32 × 25 1¼ × 1	42.4 × 33.7 1.660 × 1.315	300psi 2.07MPa	64 2.51
40 × 32 1½ × 1¼	48.3 × 42.4 1.900 × 1.660		64 2.51
50 × 25 2 × 1	60.3 × 33.7 2.375 × 1.315		64 2.51
50 × 32 2 × 1¼	60.3 × 42.4 2.375 × 1.660		64 2.51
50 × 40 2 × 1½	60.3 × 48.3 2.375 × 1.900		64 2.51
65 × 25 2½ × 1	73.0 × 33.7 2.875 × 1.315		64 2.51
65 × 32 2½ × 1¼	73.0 × 42.4 2.875 × 1.660		64 2.51
65 × 40 2½ × 1½	73.0 × 48.3 2.875 × 1.900		64 2.51
65 × 50 2½ × 2	73.0 × 60.3 2.875 × 2.375		64 2.51
65 × 25 2½ × 1	76.1 × 33.7 3.000 × 1.315		64 2.51
65 × 32 2½ × 1¼	76.1 × 42.4 3.000 × 1.660		64 2.51
65 × 40 2½ × 1½	76.1 × 48.3 3.000 × 1.900		64 2.51
65 × 50 2½ × 2	76.1 × 60.3 3.000 × 2.375		64 2.51
80 × 25 3 × 1	88.9 × 33.7 3.500 × 1.315		64 2.51
80 × 32 3 × 1¼	88.9 × 42.4 3.500 × 1.660		64 2.51
80 × 40 3 × 1½	88.9 × 48.3 3.500 × 1.900		64 2.51
80 × 50 3 × 2	88.9 × 60.3 3.500 × 2.375		64 2.51
80 × 65 3 × 2½	88.9 × 76.1 3.500 × 3.000		64 2.51
100 × 25 4 × 1	108.0 × 33.7 4.250 × 1.315		76 2.99
100 × 32 4 × 1¼	108.0 × 42.4 4.250 × 1.660		76 2.99
100 × 40 4 × 1½	108.0 × 48.3 4.250 × 1.900		76 2.99
100 × 50 4 × 2	108.0 × 60.3 4.250 × 2.375		76 2.99
100 × 65 4 × 2½	108.0 × 76.1 4.250 × 3.000		76 2.99
100 × 80 4 × 3	108.0 × 88.9 4.250 × 3.500		76 2.99

注：产品尺寸可能会因技术原因有所改动，恕不另行通知，如有疑问请征询威斯盾集团技术部
Note: The measurements of products maybe changed for the technical reason without responsibility note, please feel free to contact technical Dept.

Reducer

螺纹式大小头
Threaded Concentric Reducdr
XGQT07S

Nominal Size mm/in 规格	Pipe OD. mm/in 管子基本尺寸	Working Pressure psi/MPa 工作压力	Dimensions L mm/in 尺寸
100×25 4×1	114.3×33.7 4.500×1.315	300psi 2.07MPa	76 2.99
100×32 4×1 1/4	114.3×42.4 4.500×1.660		76 2.99
100×40 4×1 1/2	114.3×48.3 4.500×1.900		76 2.99
100×50 4×2	114.3×60.3 4.500×2.375		76 2.99
100×65 4×2 1/2	114.3×76.1 4.500×3.000		76 2.99
100×80 4×3	114.3×88.9 4.500×3.500		76 2.99
125×25 5×1	133.0×33.7 5.250×1.315		89 3.50
125×32 5×1 1/4	133.0×42.4 5.250×1.660		89 3.50
125×40 5×1 1/2	133.0×48.3 5.250×1.900		89 3.50
125×50 5×2	133.0×60.3 5.250×2.375		89 3.50
125×25 5×1	139.7×33.7 5.500×1.315		89 3.50
125×32 5×1 1/4	139.7×42.4 5.500×1.660		89 3.50
125×40 5×1 1/2	139.7×48.3 5.500×1.900		89 3.50
125×50 5×2	139.7×60.3 5.500×2.375		89 3.50
125×65 5×2 1/2	139.7×76.1 5.500×3.000		89 3.50
125×80 5×3	139.7×88.9 5.500×3.500		89 3.50
125×100 5×4	139.7×114.3 5.500×4.500		89 3.50
125×25 5×1	141.3×33.7 5.563×1.315		89 3.50
125×32 5×1 1/4	141.3×42.4 5.563×1.660		89 3.50
125×40 5×1 1/2	141.3×48.3 5.563×1.900		89 3.50
125×50 5×2	141.3×60.3 5.563×2.375		89 3.50
125×65 5×2 1/2	141.3×76.1 5.563×3.000		89 3.50
125×80 5×3	141.3×88.9 5.563×3.500		89 3.50
150×25 6×1	159.0×33.7 6.250×1.315		102 4.01

螺纹式大小头
Threaded Concentric Reducdr
XGQT07S

Nominal Size mm/in 规格	Pipe OD. mm/in 管子基本尺寸	Working Pressure psi/MPa 工作压力	Dimensions L mm/in 尺寸
150×32 6×1 1/4	159.0×42.4 6.250×1.660	300psi 2.07MPa	102 4.01
150×40 6×1 1/2	159.0×48.3 6.250×1.900		102 4.01
150×50 6×2	159.0×60.3 6.250×2.375		102 4.01
150×65 6×2 1/2	159.0×76.1 6.250×3.000		102 4.01
150×80 6×3	159.0×88.9 6.250×3.500		102 4.01
150×25 6×1	165.1×33.7 6.500×1.315		102 4.01
150×32 6×1 1/4	165.1×42 6.500×1.660		102 4.01
150×40 6×1 1/2	165.1×48.3 6.500×1.900		102 4.01
150×50 6×2	165.1×60.3 6.500×2.375		102 4.01
150×65 6×2 1/2	165.1×76.1 6.500×3.000		102 4.01
150×80 6×3	165.1×88.9 6.500×3.500		102 4.01
150×100 6×4	165.1×114.3 6.500×4.500		102 4.01
150×25 6×1	168.3×33.7 6.625×1.315		102 4.01
150×32 6×1 1/4	168.3×42.4 6.625×1.660		102 4.01
150×40 6×1 1/2	168.3×48.3 6.625×1.900		102 4.01
150×50 6×2	168.3×60.3 6.625×2.375		102 4.01
200×25 8×1	219.1×33.7 8.625×1.315		127 5
200×32 8×1 1/4	219.1×42.4 8.625×1.660		127 5
200×40 8×1 1/2	219.1×48.3 8.625×1.900		127 5
200×50 8×2	219.1×60.3 8.625×2.375		127 5
200×65 8×2 1/2	219.1×76.1 8.625×3.000		127 5
200×80 8×3	219.1×88.9 8.625×3.500		127 5
200×100 8×4	219.1×114.3 8.625×4.500		127 5

注：产品尺寸可能会因技术原因有所改动，恕不另行通知，如有疑问请征询威斯盾集团技术部
Note: The measurements of products maybe changed for the technical reason without responsibility note, please feel free to contact technical Dept.

Adaptor flange

ANSI Class 150

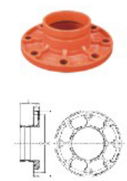

转换法兰
Adaptor Flange
XGQT08

Nominal Size mm/in 规格	Pipe OD. mm/in 管子基本尺寸	Working Pressure psi/MPa 工作压力	Dimensions mm/in L mm/in 尺寸	X mm/in	Y mm/in	Z mm/in	Bolt Size No.–Size mm 螺栓
50 2	60.3 2.375	300psi 2.07MPa	60 2.362	160 6.30	120.7 4.75	15 0.59	4–5/8
65 21/2	73 2.875		60 2.362	180 7.08	139.7 5.50	15 0.59	4–5/8
80 3	88.9 3.5		65 2.559	200 7.87	152.5 6.00	15 0.59	8–5/8
100 4	114.3 4.5		70 2.756	228 8.97	190.5 7.50	16 0.63	8–5/8
100 4	141 4.5		70 2.756	250 9.84	216 8.50	17 0.67	8–5/8
150 6	168.3 6.625		70 2.756	282 11.10	241.5 9.50	17 0.67	8–3/4
200 8	219.1 8.625		75 2.952	340 13.39	298.5 11.75	19 0.74	8–3/4
250 10	273 10.75		85 3.346	405 15.94	362 14.25	21 0.82	12–7/8
300 12	323.9 12.750		85 3.346	482 18.97	432 17.00	22 0.86	12–7/8

PN16

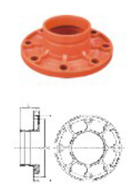

转换法兰
Adaptor Flange
XGQT08

Nominal Size mm/in 规格	Pipe OD. mm/in 管子基本尺寸	Working Pressure psi/MPa 工作压力	Dimensions mm/in L mm/in 尺寸	X mm/in	Y mm/in	Z mm/in	Bolt Size No.–Size mm 螺栓
50 2	60.3 2.375	232psi 1.6MPa	65 2.559	165 6.50	125 4.92	16 0.63	4–M16
65 21/2	76.1 3		65 2.559	185 7.28	145 5.70	16 0.63	4–M16
80 3	88.9 3.5		65 2.559	200 7.87	160 6.29	16 0.63	8–M16
100 4	108 4.25		70 2.756	220 8.66	180 7.08	16 0.63	8–M16
100 4	114.3 4.5		70 2.756	220 8.66	180 7.08	16 0.63	8–M16
125 5	133 5.25		70 2.756	250 9.84	210 8.26	18 0.71	8–M16
125 5	139.7 5.5		70 2.756	250 9.84	210 8.26	18 0.71	8–M16
150 6	159 6.25		70 2.756	282 11.10	240 9.44	18 0.71	8–M20
150 6	165.1 6.5		70 2.756	282 11.10	240 9.44	18 0.71	8–M20
150 6	168.3 6.625		70 2.756	282 11.10	240 9.44	18 0.71	8–M20
200 8	219.1 8.625		80 3.150	340 13.39	295 11.61	19 0.74	12–M20
250 10	273 10.75		85 3.346	405 15.94	355 13.97	21 0.82	12–M24
300 12	323.9 12.750		90 3.543	460 18.11	410 16.14	24 0.94	12–M24

注：产品尺寸可能会因技术原因有所改动，恕不另行通知，如有疑问请征询威斯盾集团技术部
Note: The measurements of products maybe changed for the technical reason without responsibility note, please feel free to contact technical Dept.

WEIZIDOM

www.wsdsolution.com
www.wsdvalves.com

Fire Fighting Valve

WD-371X/WD-371Y Butterfly Valve

Butterfly Valve c/w Signal Gearbox-Wafer End

Technical Features

- Flange Standard: ANSI 125/150, DIN 2501 PN10/16
- Connection: Wafer End
- Sizes: 2", 2^1/2", 3", 4", 5", 6", 8", 10", 12"
- Approvals: UL, CUL, FM, NSF/ANSI 61 & NSF / ANSI 372
- Maximum Working Pressure: 300 PSI (Maximum Testing Pressure: 600 PSI) conforms to UI1091 & ULC/ORD–C1091 & FM 1112
- Maximum Working Temperature: 80℃/176°F
- Application: Indoor & Outdoor Use, Fire inflow water, drain pipe, high–rising building fire fighting system, industrial factory building fire protection system.
- Coating Details: Epoxy coated interior and exterior by Electrostatic Spray or coating upon request
- Disc: Ductile Iron EPDM Rubber Encapsulated
- Top Flange Standard: ISO 5211
- Certified lead–free by NSF /ANSI 61 & NSF/ANSI 372 is available

Valve Material List

No.	Description	Material
1	Upper Shaft Sealing Nut	WCB
2	Shaft Seal	EPDM
3	Body	Ductile Iron
4	Upper Shaft	416 Stainless Steel
5	Disc+Rubber Seat	Ductile Iron+EPDM
6	Lower Shaft	416 Stainless Steel
7	Lower Shaft Sealing Nut	WCB
8	End Face Seal	EPDM
9	Stem Bushing	PTFE/C95400
10	O–Ring	EPDM
11	Gearbox	

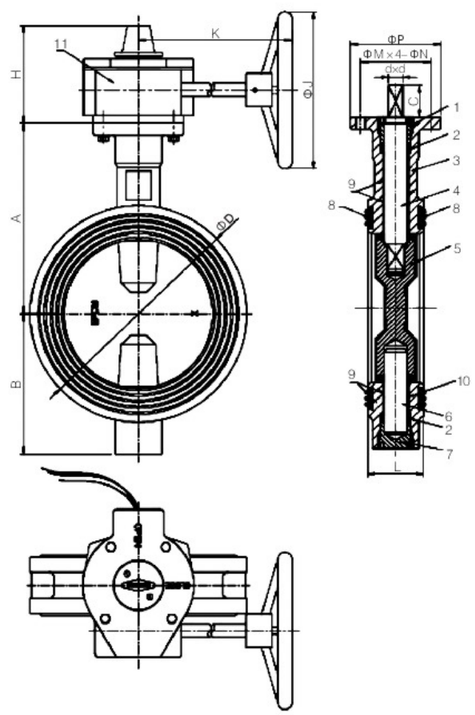

Dimensions

Size	A	B	C	D	H	K		J	P	M	N	d	L
2"	110	85	32	100	111	153	218	152	90	70	9	10	42
21/2"	125	95	32	112	111	153	218	152	90	70	9	10	44.2
3"	140	100	32	120	111	153	218	152	90	70	9	11	45.3
4"	160	100	32	161	111	153	218	152	90	70	9	14	52
5"	170	125	32	182	111	153	218	152	90	70	9	14	54.4
6"	190	140	32	216	111	153	218	200	90	70	9	16	55.8
8"	230	175	32	260	126	210	232	300	125	102	12	19	60.5
10"	260	200	45	320	126	210	232	300	125	102	12	24	66.5
12"	300	240	45	375	161	249		350	150	125	14	26	76.9

3D Pictures

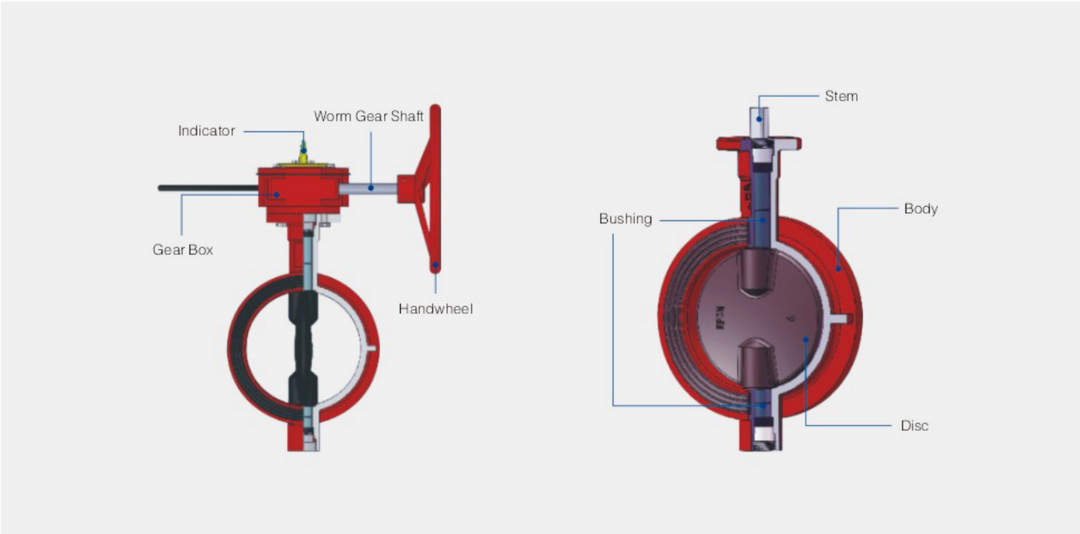

Gearbox Drawing

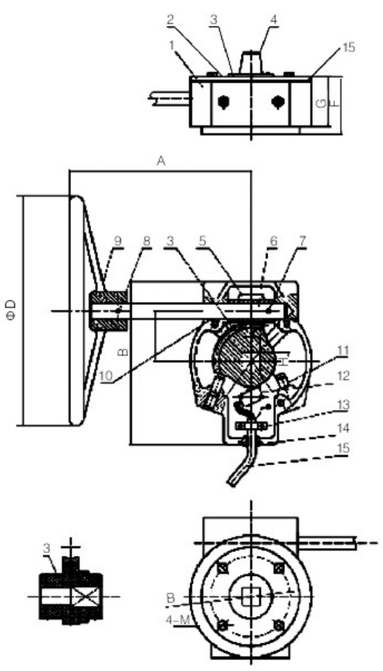

Gearbox Material List

No.	Description	Material
1	Gear Body	Ductile Iron
2	Gear Cover	Ductile Iron
3	Worm Wheel	Ductile Iron
4	Indicator	Ductile Iron
5	Worm	Steel
6	Handwheel Shaft	Steel
7	Pin	416 Stainless Steel
8	Pin	416 Stainless Stee
9	Handwheel	Ductile Iron
10	O-Ring	EPDM
11	Set Screw	Steel
12	Signal Switch	Switch Assembly
13	Clip	Nylon
14	Sealing Ring	EPDM
15	Wire	Wire
16	Gasket	EPDM

Dimensions

Gearbox	Valve	A		B	C	D	E	F	G	H	M
24:1	2"-2½"	153	218	164	45	152	70	65	58	10	M8
24:1	3"	153	218	164	45	152	70	65	58	11	M8
24:1	4"-5"	153	218	164	45	152	70	65	58	14	M8
24:1	6"	153	218	164	45	200	70	65	58	16	M8
30:1	8"	210	232	205	63	300	102	79	67	19	M10
30:1	10"	210	232	205	63	300	102	79	67	22	M10
80:1	12"	249		284	120	350	125	118	110	24	M12

Butterfly Valve c/w Signal Gearbox-Grooved End

Technical Features

- Conforms: ANSI/AWWA C606 or Metric Standard Clear Waterway design
- Connection: Grooved End
- Sizes: 2", 2½", 3", 4", 5", 6", 8", 10", 12"
- Approvals: UL, CUL, FM, NSF/ANSI 61 & NSF/ANSI372
- Maximum Working Pressure: 300 PSI (Maximum Testing Pressure: 600 PSI) conforms to UI1091 & ULC/ORD-C1091 & FM 1112
- Maximum Working Temperature: 80℃/176℉
- Application: Indoor & Outdoor Use, Fire inflow water, drain pipe, high-rising building fire fighting system, industrial factory building fire protection system
- Coating Details: Epoxy coated interior and exterior by Electrostatic Spray or coating upon request
- Disc: Ductile Iron EPDM Rubber Encapsulated
- Top Flange Standard: ISO 5211
- Certified lead-free by NSF/ANSI 61 & NSF/ANSI 372 is available

Valve Material List

No.	Description	Material
1	Upper Shaft Sealing Nut	WCB
2	Shaft Seal	EPDM
3	Body	Ductile Iron
4	Upper Shaft	416 Stainless Steel
5	Disc+Rubber Seat	Ductile Iron+EPDM
6	Lower Shaft	416 Stainless Steel
7	Lower Shaft Sealing Nut	WCB
8	Stem Bushing	PTFE/C95400
9	O-Ring	EPDM
10	Gearbox	

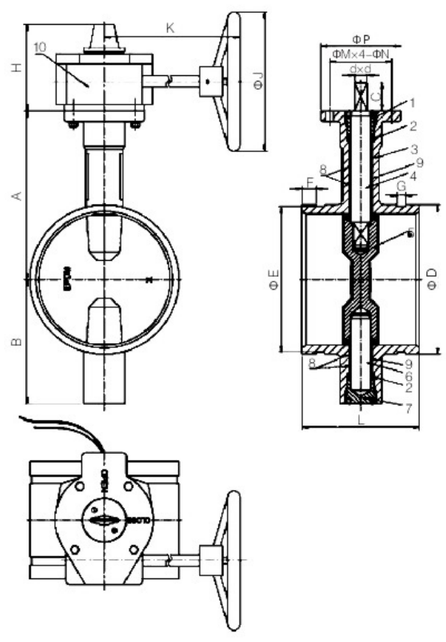

Dimensions

Size	A	B	C	D	E	F	G	H	K		J	P	M	N	d	L
2"	110	85	32	60.3	57.15	15.9	7.9	111	153	218	152	90	70	9	10	81 88
2½"	125	95	32	73 76.1	69.1 72.3	15.9	7.9	111	153	218	152	90	70	9	10	96.4
3"	140	100	32	88.9	84.9	15.9	7.9	111	153	218	152	90	70	9	11	97
4"	160	100	32	114.3	110.1	15.9	9.5	111	153	218	152	90	70	9	14	115.1
5"	170	125	32	139.7 141.3	135.5 137	15.9	9.5	111	153	218	152	90	70	9	14	132.4 148
6"	190	140	32	165.1 168.3	160.9 164	15.9	9.5	111	153	218	200	90	70	9	16	132.4 148
8"	230	175	32	219.1 216.3	214.4 211.6	19	11.1	126	210	232	300	125	102	12	19	133 147.4
10"	260	200	45	267.4 273	262.6 268.3	19	12.7	126	210	232	300	125	102	12	24	159
12"	300	240	45	318.5 323.8	312.9 318.3	19	12.7	161	249		350	150	125	14	26	165

3D Pictures

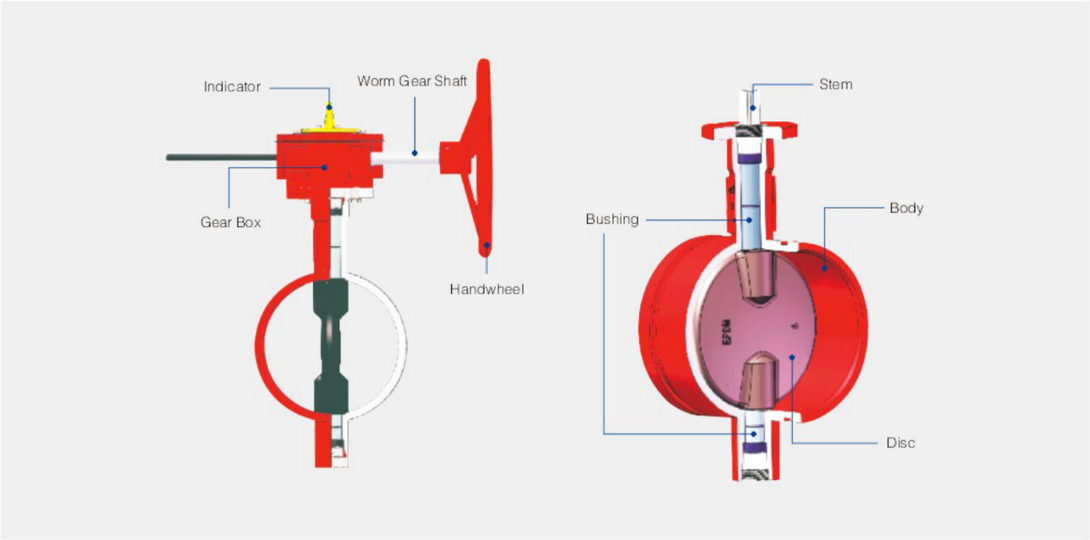

Gearbox Drawing

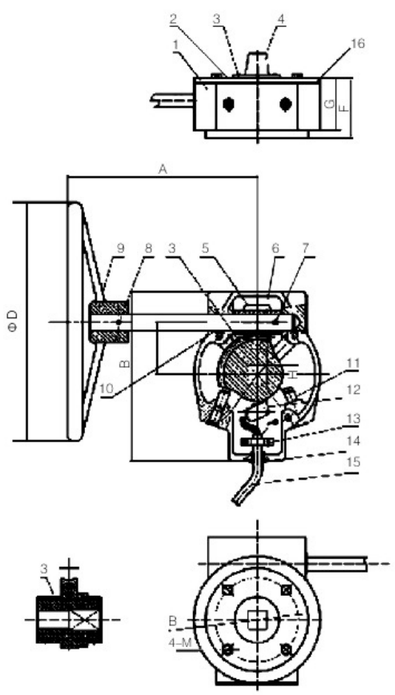

Gearbox Material List

No.	Description	Material
1	Gear Body	Ductile Iron
2	Gear Cover	Ductile Iron
3	Worm Wheel	Ductile Iron
4	Indicator	Ductile Iron
5	Worm	Steel
6	Handwheel Shaft	Steel
7	Pin	416 Stainless Steel
8	Pin	416 Stainless Stee
9	Handwheel	Ductile Iron
10	O-Ring	EPDM
11	Set Screw	Steel
12	Signal Switch	Switch Assembly
13	Clip	Nylon
14	Sealing Ring	EPDM
15	Wire	Wire
16	Gasket	EPDM

Dimensions

Gearbox	Valve	A		B	C	D	E	F	G	H	M
24:1	2"-2½"	153	218	164	45	152	70	65	58	10	M8
24:1	3"	153	218	164	45	152	70	65	58	11	M8
24:1	4"-5"	153	218	164	45	152	70	65	58	14	M8
24:1	6"	153	218	164	45	200	70	65	58	16	M8
30:1	8"	210	232	205	63	300	102	79	67	19	M10
30:1	10"	210	232	205	63	300	102	79	67	22	M10
80:1	12"	249		284	120	350	125	118	110	24	M12

Butterfly Valve with Gearbox/Lever-Wafer End

Technical Features

- Flange Standard: ANSI 125 / 150, DIN 2501 PN 10 / 16
- Connection: Wafer End
- Sizes: 2", 21/2", 3", 4", 5", 6", 8", 10", 12"
- Maximum Working Pressure: 300 PSI(Maximum Testing Pressure: 600 PSI) conforms to UL1091 & ULC / ORD-C1091 & FM 1112
- Maximum Working Temperature: 80℃/176°F
- Application: Indoor & Outdoor Use, Fire inflow water, drain pipe, high-rising building fire fighting system, industrial factory building fire protection system
- Coating Details: Epoxy coated interior and exterior by Electrostatic Spray or coating upon request
- Disc: Ductile Iron EPDM Rubber Encapsulated
- Top Flange Standard: ISO 5211
- Certified lead-free by NSF/ANSI 61 & NSF / ANSI 372 is available

Valve Material List

No.	Description	Material
1	Upper Shaft Sealing Nut	WCB
2	Shaft Seal	EPDM
3	Body	Ductile Iron
4	Upper Shaft	416 Stainless Steel
5	Disc+Rubber Seat	Ductile Iron+EPDM
6	Lower Shaft	416 Stainless Steel
7	Lower Shaft Sealing Nut	WCB
8	End Face Seal	EPDM
9	Stem Bushing	PTFE/C95400
10	O-Ring	EPDM
11	Lever	
12	Gearbox	

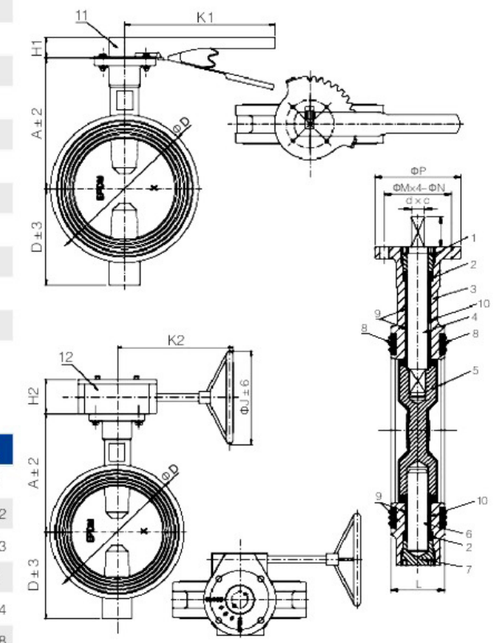

Dimensions

Size	A	B	C	D	H1	H2	K1	K2	J	P	M	N	d	L
2"	110	85	32	100	32	65	267	151	152	90	70	9	10	42
2½"	125	95	32	112	32	65	267	151	152	90	70	9	10	44.2
3"	140	100	32	120	32	65	267	151	152	90	70	9	11	45.3
4"	160	100	32	161	32	65	267	151	152	90	70	9	14	52
5"	170	125	32	182	32	65	267	151	152	90	70	9	14	54.4
6"	190	140	32	216	32	65	267	146	200	90	70	9	16	55.8
8"	230	175	32	260	37	77	267	233	290	125	102	12	19	60.5
10"	260	200	45	320	/	77	/	233	290	125	102	12	22	66.5
12"	300	240	45	375	/	77	/	226	290	150	125	14	26	76.9

GD-381G Butterfly Valve

Butterfly Valve with Gearbox - Grooved End

Technical Features

- Conforms: ANSI/AWWA C606 or Metric Standard Clear Waterway design
- Connection: Grooved End
- Sizes: 2", 21/2", 3", 4", 5", 6", 8", 10", 12"
- Maximum Working Pressure: 300 PSI(Maximum Testing Pressure: 600 PSI) conforms to UL1091 & ULC/ORD-C1091 & FM 1112
- Maximum Working Temperature: 80℃ / 176°F
- Application: Indoor & Outdoor Use, Fire inflow water, drain pipe, high-rising building fire fighting system, industrial factory building fire protection system
- Coating Details: Epoxy coated interior and exterior by Electrostatic Spray or coating upon request
- Disc: Ductile Iron EPDM Rubber Encapsulated
- Top Flange Standard: ISO 5211
- Certified lead-free by NSF/ANSI 61 & NSF / ANSI 372 is available

Valve Material List

No.	Description	Material
1	Upper Shaft Sealing Nut	WCB
2	Shaft Seal	EPDM
3	Body	Ductile Iron
4	Upper Shaft	416 Stainless Steel
5	Disc+Rubber Seat	Ductile Iron+EPDM
6	Lower Shaft	416 Stainless Steel
7	Lower Shaft Sealing Nut	WCB
8	Stem Bushing	PTFE/C95400
9	O-Ring	EPDM
10	Gearbox	

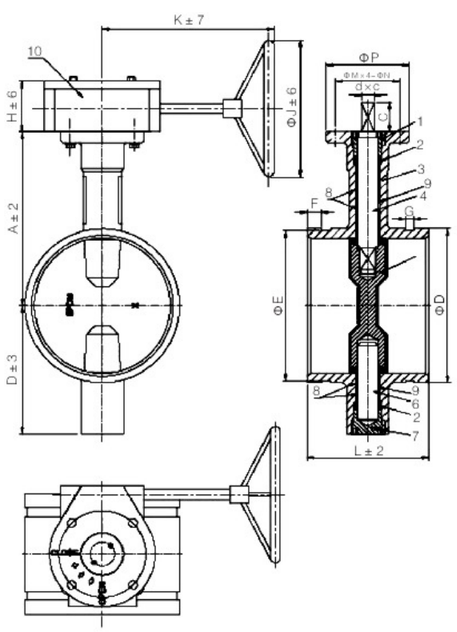

Dimensions

Size	A	B	C	D	E	F	G	H	K	J	P	M	N	d	L
2"	110	85	32	60.3	57.15	15.9	7.9	65	151	152	90	70	9	10	81 88
21/2"	125	95	32	73 76.1	69.1 72.3	15.9	7.9	65	151	152	90	70	9	10	96.4
3"	140	100	32	88.9	84.9	15.9	7.9	65	151	152	90	70	9	11	97
4"	160	100	32	114.3	110.1	15.9	9.5	65	151	152	90	70	9	14	115.1
5"	170	125	32	139.7 141.3	135.5 137	15.9	9.5	65	151	152	90	70	9	14	132.4 148
6"	190	140	32	165.1 168.3	160.9 164	15.9	9.5	65	146	200	90	70	9	16	132.4 148
8"	230	175	32	219.1 216.3	214.4 211.6	19	11.1	77	233	290	125	102	12	19	133 147.4
10"	260	200	45	267.4 273	262.6 268.3	19	12.7	77	233	290	125	102	12	22	159
12"	300	240	45	318.5 323.8	312.9 318.3	19	12.7	77	226	290	150	125	14	26	165

WD-371G/WD-371L Butterfly Valve

Fire Fighting Valve

Technical Features

- Conforms: ANSI / AWWA C606 or Metric Standard Clear Waterway design
- Connection: Grooved End
- Sizes: 2",21/2", 3", 4", 5", 6", 8"
- Maximum Working Pressure: 300 PSI (Maximum Testing Pressure: 600 PSI) conforms to UL1091 & ULC / ORD-C1091 & FM 1112
- Maximum Working Temperature: 80℃ / 176°F
- Application: Indoor & Outdoor Use, Fire inflow water, drain pipe high-rising building fire fighting system, industrial factory building fire protection system
- Coating Details: Epoxy coated interior and exterior by Electrostatic Spray or coating upon request
- Disc: Ductile Iron EPDM Rubber Encapsulated
- Top Flange Standard: ISO 5211
- Certified lead-free by NSF/ANSI 61 & NSF/ANSI 372 is available

Valve Material List

No.	Description	Material
1	Upper Shaft Sealing Nut	WCB
2	Shaft Seal	EPDM
3	Body	Ductile Iron
4	Upper Shaft	416 Stainless Steel
5	Disc+Rubber Seat	Ductile Iron+EPDM
6	Lower Shaft	416 Stainless Steel
7	Lower Shaft Sealing Nut	WCB
8	Stem Bushing	PTFE/C95400
9	O-Ring	EPDM
10	Lever	Malleable Iron

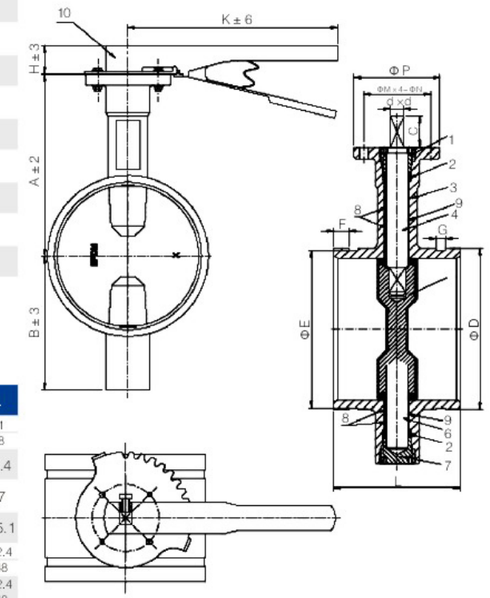

Dimensions

Size	A	B	C	D	E	F	G	H	K	P	M	N	d	L
2"	110	85	32	60.3	57.2	15.9	7.9	32	267	90	70	9	10	81 88
21/2"	125	95	32	73 76.1	69.1 72.3	15.9	7.9	32	267	90	70	9	10	96.4
3"	140	100	32	88.9	84.9	15.9	7.9	32	267	90	70	9	11	97
4"	160	100	32	114.3	110.1	15.9	9.5	32	267	90	70	9	14	115.1
5"	170	125	32	139.7 141.3	135.5 137	15.9	9.5	32	267	90	70	9	14	132.4 148
6"	190	140	32	165.1 168.3	160.9 164	15.9	9.5	32	267	90	70	9	16	132.4 148
8"	230	175	37	216.3 219.1	211.6 214.4	19	11.1	37	353	125	102	12	19	147.4 133

NINGJIN APC INDUSTRIES CO.,LTD. offers a complete package of resilient wedgegate valve with excellent Ductile Iron structure and stable sealing capability and popular end connection options

APC Resilient Wedge Gate Valve Features

- Conforms: ANSI/AWWA C515
- Approvals: UL, CUL, FM, NSF/ANSI 61 & NSF/ANSI 372 Certified lead-free
- Maximum Working Temperature: 80℃ / 176°F
- Coating: Epoxy coated interior and exterior by Electrostatic Spray or Coating upon request

Application

- Outdoor and Indoor Fire inflow water, water supply and drainage, potable water, high-rising building fire fighting system, industrial factory building fire protection system.
- All OS & Y gate valves have tamper resistant handwheel nuts as well as pre-grooved stems enabling seamless tamper switch installation.
- All NRS gate valves are available with operated nut installed with vertical indicator post and wall type indicator.

Advantages

- Valve body, bonnet, disc, gland, & operating nut are all produced with ductile iron material with superior strength-to-weight ratios to guarantee high quality.
- Long service life with resilient seat cycling test at least 5000 times.
- The bottom of gate valve adopt straight-through design, no foreign matter store to make sure smooth flow and reliable sealing.
- Self-sealing design between the bonnet and body make the sealing more tight when pressure is higher within the allowable range.
- Multiple O-ring sealing structure to protect the stem under pressure during operation and maintenance, it causes no damage to the operator.

A full range UL/FM Gate Valves to meet customers' different requirements

- UL/FM OS&Y Gate valve (200psi & 300psi)
- Flange × Flange
- Flange × Groove
- Groove × Groove

- UL/FM NRS Gate valve(200psi & 300psi)
- Flange × Flange
- Flange × Groove
- Groove × Groove
- MJ × MJ
- MJ × Flange

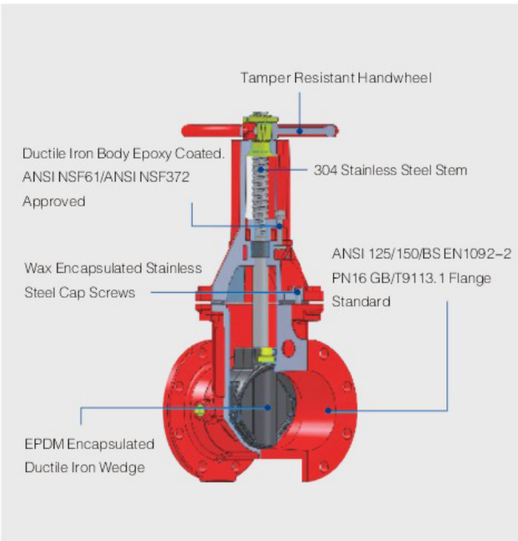

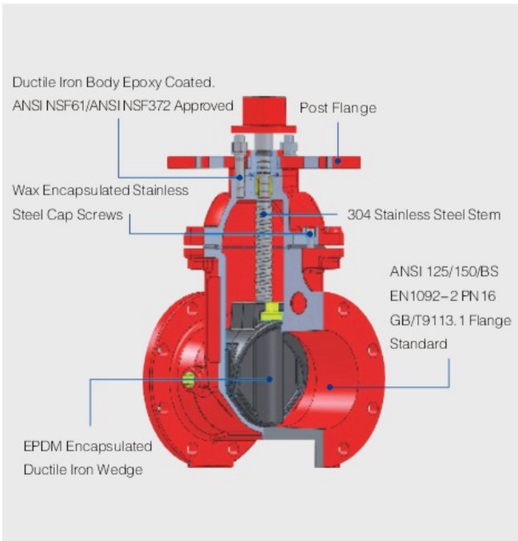

UL/FM OS&Y Gate Valves

Z41
Flange
ANSI, BS, DIN, GB
2"/DN50-16"/DN400
14Bar/200psi
UL/FM/NSF61/NSF372

Z481
Flange × Groove
ANSI, BS, DIN, GB
2"/DN50-16"/DN300
14Bar/200psi
UL/FM/NSF61/NSF372

Z81
Groove
ANSI, BS, DIN, GB
2"/DN50-12"/DN300
14Bar/200psi
UL/FM/NSF61/NSF372

Z41-300
Flange
ANSI, BS, DIN, GB
2½"/DN65-12"/DN300
31Bar/300psi
UL/FM/NSF61/NSF372

Z41-300A
Flange
ANSI, BS, DIN, GB
2½"/DN65-12"/DN300
21Bar/300psi
UL/FM/NSF61/NSF372

Z81-300
Groove
ANSI, BS, DIN, GB
2½"/DN65-12"/DN300
21Bar/300psi
UL/FM/NSF61/NSF372

Z81-300A
Groove
ANSI, BS, DIN, GB
2½"/DN65-12"/DN300
21Bar/300psi
UL/FM/NSF61/NSF372

Z481-300
Flange × Groove
ANSI, BS, DIN, GB
2½"/DN65-12"/DN300
21Bar/300psi
UL/FM/NSF61/NSF372

Z481-300A
Flange × Groove
ANSI, BS, DIN, GB
2½"/DN65-12"/DN300
21Bar/300psi
UL/FM/NSF61/NSF372

UL/FM Non Rising Stem Gate Valves

Z45
Flange
ANSI, BS, DIN, GB
2"/DN50-12"/DN300
14Bar/200psi
UL/FM/NSF61/NSF372

Z485
Flange × Groove
ANSI, BS, DIN, GB
2"/DN50-12"/DN300
14Bar/200psi
UL/FM/NSF61/NSF372

Z85
Groove
ANSI, BS, DIN, GB
2"/DN50-12"/DN300
14Bar/200psi
UL/FM/NSF61/NSF372

Z45-300
Flange
ANSI, DIN, GB
2½"/DN65-12"/DN300
31Bar/300psi
UL/FM/NSF61/NSF372

Z45-300A
Flange
ANSI, DIN, GB
2"/DN50-12"/DN300
21Bar/300psi
UL/FM/NSF61/NSF372

Z85-300
Groove
ANSI, DIN, GB
2½"/DN65-12"/DN300
21Bar/300psi
UL/FM/NSF61/NSF372

Z85-300A
Groove
ANSI, DIN, GB
2½"/DN65-12"/DN300
21Bar/300psi
UL/FM/NSF61/NSF372

Z485-300
Flange × Groove
ANSI, DIN, GB
2½"/DN65-12"/DN300
21Bar/300psi
UL/FM/NSF61/NSF372

Z485-300A
Flange × Groove
ANSI, DIN, GB
2½"/DN65-12"/DN300
21Bar/300psi
UL/FM/NSF61/NSF372

Z45-300FJA
Flange × MJ
ANSI, DIN, GB
2"/DN50-12"/DN300
21Bar/300psi
UL/FM/NSF61/NSF372

Z45-300MJA
MJ × MJ
ANSI, DIN, GB
2"/DN50-12"/DN300
21Bar/300psi
UL/FM/NSF61/NSF372

Z41-300 Gate Valve

Resilient Wedge OS & Y Gate Valve - Flanged End

Technical Features

- Nominal Pressure: 300PSI
- Flange Standard: ASME / ANSI B16.1 Cass 125 or ASME/ANSI B16.42 Class 150 or BS EN 1092-2 PN 16 or GB/T9113.1
- Sizes: 2½", 3", 4", 5", 6", 8", 10", 12"
- Face to Face Standard: ASME B16.10
- Approvals: UL, CUL, FM, NSF/ANSI 61 & NSF / ANSI 372, CCC
- Maximum Working Pressure: 300PSI(Maximum Testing Pressure: 600PSI) conforms to UL 262, ULC/ORD C 262-92, FM 1120 / 1130
- Maximum Working Temperature: 80℃ / 176°F
- Coating Details: Epoxy coated interior and exterior by Electrostatic Spray or Coating upon request
- NPT plug on body with 2 operating nuts
- Certified lead-free by NSF/ANSI 61 & NSF / ANSI 372 is available

Valve Material List

No.	Description	Material
1	Gasket	C95400
2	Bonnet	Ductile Iron
3	Packing	Graphite
4	Disc	Ductile Iron +EPDM
5	Body	Ductile Iron
6	Sealing Ring	EPDM
7	Bolt	Steel 1045
8	Gland	Ductile Iron
9	Nut	Steel 1045
10	Flat Washer	Steel 1045
11	Bolt	Steel 1045
12	Handwheel	Ductile Iron
13	Lock Nut	C95400
14	Locating Screw	Stainless Steel 304
15	Stem	Stainless Steel 304
16	Stem Nut	C95400
17	Plug	C95400
18	Lifting Nut	CF8
19	Pin	Stainless Steel 304
20	Sealing Ring	EPDM

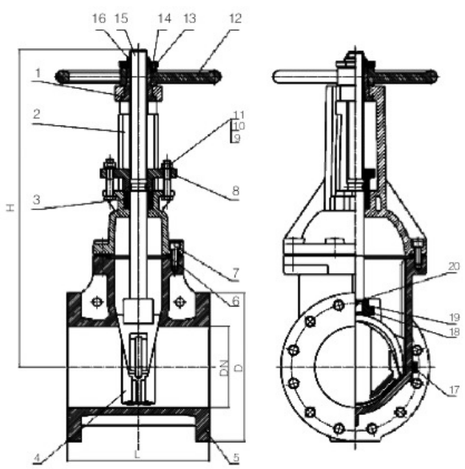

Dimensions

Size	DN	L	D	H
2½"	65	190	178	370
3"	80	203	191	420
4"	100	229	229	447
5"	125	254	254	547
6"	150	267	279	607
8"	200	292	343	754
10"	250	330	406	890
12"	300	356	483	1031

Z81-300 Gate Valve

Resilient Wedge OS & Y Gate Valve - Grooved End

Technical Features

- Nominal Pressure: 300PSI
- Groove standard: Metric or ANSI/AWWA C606
- Face to Face Standard: ASME B16.10
- Sizes: 2½", 3", 4", 5", 6", 8", 10", 12"
- Approvals: UL, CUL, FM, NSF/ANSI 61 & NSF/ANSI 372
- Maximum Working Pressure: 300PSI(Maximum Testing Pressure: 600PSI) conforms to UL 262, ULC /ORD C 262-92, FM 1120 / 1130
- Maximum Working Temperature: 80℃ / 176°F
- Coating Details: Epoxy coated interior and exterior by Electrostatic Spray or Coating upon request
- NPT plug on body with 2 operating nuts
- Certified lead-free by NSF/ANSI 61 & NSF/ANSI 372 is available

Valve Material List

No.	Description	Material
1	Gasket	Stainless Steel 304 or C95400
2	Bonnet	Ductile Iron
3	Packing	Graphite
4	Disc	Ductile Iron +EPDM
5	Body	Ductile Iron
6	Sealing Ring	EPDM
7	Bolt	Stainless Steel 304 or Steel 1045
8	Gland	Ductile Iron
9	Nut	Stainless Steel 304 or Steel 1045
10	Flat Washer	Stainless Steel 304 or Steel 1045
11	Bolt	Stainless Steel 304 or Steel 1045
12	Handwheel	Ductile Iron
13	Lock Nut	C95400
14	Locating Screw	Stainless Steel 304 or Steel 1045
15	Stem	Stainless Steel 304 or C95400
16	Stem Nut	C95400
17	Plug	C95400
18	Lifting Nut	CF8/CF8M or C95400
19	Pin	Stainless Steel 304
20	Sealing Ring	EPDM

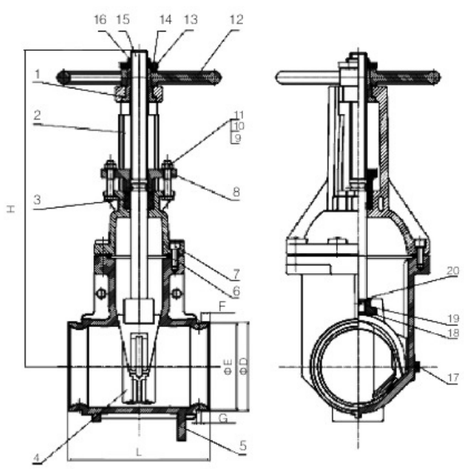

Dimensions

Size	DN	L	F	D	E	G	H
2½"	65	190	15.9	73 76.1	69.1 72.3	7.9	370
3"	80	203	15.9	88.9	84.9	7.9	420
4"	100	229	15.9	114.3	110.1	9.5	447
5"	125	254	15.9	139.7 141.3	135.5 137	9.5	547
6"	150	267	15.9	165.1 168.3	160.8 163.9	9.5	607
8"	200	292	19	216.3 219.1	211.6 214.3	11.1	754
10"	250	330	19	273	268.3	12.7	890
12"	300	356	19	323.9	318.3	12.7	1031

Resilient Wedge NRS Gate Valve - Flanged End

Technical Features

- Nominal Pressure: 300PSI
- Flange Standard: ASME/ANSI B16.1 Class 125 or ASME / ANSI B16.42 Class 150 or BS EN1092-2 PN 16 or GB/T9113.1
- Sizes: 2½", 3", 4", 5", 6", 8", 10", 12"
- Face to Face Standard: ASME B16.10
- Approvals: UL, CUL, FM, NSF / ANSI 61 & NSF / ANSI 372, CCC
- Maximum Working Pressure: 300PSI(Maximum Testing Pressure: 600PSI) conforms to UL262, ULC /ORD C262-92, FM 1120 / 1130
- Maximum Working Temperature: 80℃ / 176°F
- Coating Details: Epoxy coated interior and exterior by Electrostatic Spray or Coating upon request
- NPT plug on body with 2 operating nuts
- Certified lead-free by NSF / ANSI 61 & NSF / ANSI 372 is available

Valve Material List

No.	Description	Material
1	Flat Washer	Steel 1045 or Stainless Steel 304
2	Inner Hexagon Screw	Steel 1045 or Stainless Steel 304
3	Sealing Gland	EPDM
4	O-Ring	EPDM
5	Sealing Ring	EPDM
6	O-Ring	EPDM
7	Bonnet	Ductile Iron
8	Stem	Stainless Steel 304
9	Disc	Ductile Iron +EPDM
10	Body	Ductile Iron
11	Sealing Ring	EPDM
12	Retaining Ring	C95400
13	Gland	Ductile Iron
14	Terminal Pad	Ductile Iron
15	Link Block	Ductile Iron
16	Nut	Stainless Steel 304 or Steel 1045
17	Studs	Stainless Steel 304 or Steel 1045
18	Washer	Steel 1045
19	Inner Hexagon Screw	Steel 1045
20	Master Screw	C95400
21	Plug	C95400

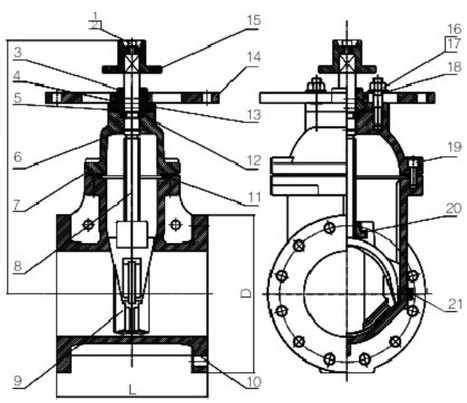

Dimensions

Size	DN	L	D	H
2½"	65	190	178	292
3"	80	203	191	322
4"	100	229	229	342
5"	125	254	254	412
6"	150	267	279	448
8"	200	292	343	534
10"	250	330	406	635
12"	300	356	483	720

Resilient Wedge NRS Gate Valve - Grooved End

Technical Features

- Nominal Pressure: 300PSI
- Groove standard: Metric or ANSI/AWWA C606
- Face to Face Standard: ASME B16.10
- Sizes: 2½", 3", 4", 5", 6", 8", 10", 12"
- Approvals: UL, CUL, FM, NSF / ANSI 61 & NSF / ANSI 372
- Maximum Working Pressure: 300PSI (Maximum Testing Pressure: 600PSI) conforms to UL262, ULC/ORD C262-92, FM 1120/1130
- Maximum Working Temperature: 80℃ / 176°F
- Coating Details: Epoxy coated interior and exterior by Electrostatic Spray or Coating upon request
- NPT plug on body with 2 operating nuts
- Certified lead-free by NSF / ANSI 61 & NSF / ANSI 372 is available

Valve Material List

No.	Description	Material
1	Flat Washer	Steel 1045 or Stainless Steel 304
2	Hexagon Socket Screw	Steel 1045 or Stainless Steel 304
3	Sealing Ring	EPDM
4	O-Ring	EPDM
5	Sealing Ring	EPDM
6	O-Ring	EPDM
7	Bonnet	Ductile Iron
8	Stem	Stainless Steel 304 or C95400
9	Plug	Stainless Steel 304 or C95400
10	Disc	Ductile Iron +EPDM
11	Body	Ductile Iron
12	Sealing Ring	EPDM
13	Retaining Ring	C95400
14	Gland	Ductile Iron
15	Post Flange	Ductile Iron
16	Wrench Nut	Ductile Iron
17	Bolt	Stainless Steel 304 or Steel 1045
18	Washer	Stainless Steel 304 or Steel 1045
19	Hexagon Socket Screw	Steel 1045 or Stainless Steel 304
20	Stem Nut	CF8 or C95400

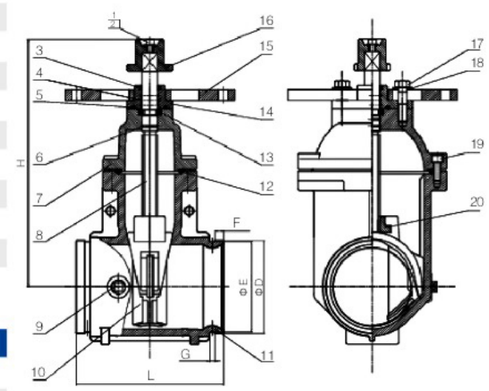

Dimensions

Size	DN	L	F	D	E	G	H
2½"	65	190	15.9	73 76.1	69.1 72.3	7.9	292
3"	80	203	15.9	88.9	84.9	7.9	322
4"	100	229	15.9	114.3	110.1	9.5	342
5"	125	254	15.9	139.7 141.3	135.5 137	9.5	412
6"	150	267	15.9	165.1 168.3	160.8 163.9	9.5	448
8"	200	292	19	216.3 219.1	211.6 214.3	11.1	534
10"	250	330	19	273	268.3	12.7	635
12"	300	356	19	323.9	318.3	12.7	720

Z41-300A Gate Valve

Resilient Wedge OS & Y Gate Valve - Flanged End

Technical Features

- Nominal Pressure: 300PSI
- Conforms: ANSI/AWWA C515 Standard
- Face to Face Standard: ASME B16.10
- Sizes: 2½", 3", 4", 5", 6", 8", 10", 12"
- Flange Standard: ASME/ANSI B16.1 Class 125 or ASME / ANSI B16.42 Class 150 or BS EN1092-2 PN16 or GB/T9113.1
- Approvals: FM, UL, CUL, NSF / ANSI 61 & NSF / ANSI 372
- Maximum Working Pressure: 300PSI (Maximum Testing Pressure: 600PSI) conforms to UL262, ULC/ORD C262-92, FM 1120 / 1130
- Maximum Working Temperature: 80℃ / 176°F
- Coating Details: Epoxy coated interior and exterior by Electrostatic Spray or Coating upon request
- NPT plug on body with 2 operating nuts
- Certified lead-free by NSF/ANSI 61 &NSF/ANSI 372 is available

Valve Material List

No.	Description	Material
1	Gasket	Stainless Steel 304 or C95400
2	Bonnet	Ductile Iron
3	Packing	Graphite
4	Disc	Ductile Iron +EPDM
5	Body	Ductile Iron
6	Sealing Ring	EPDM
7	Bolt	Stainless Steel 304 or Steel 1045
8	Gland	Ductile Iron
9	Nut	Stainless Steel 304 or Steel 1045
10	Flat Washer	Stainless Steel 304 or Steel 1045
11	Bolt	Stainless Steel 304 or Steel 1045
12	Handwheel	Ductile Iron
13	Lock Nut	C95400
14	Locating Screw	Stainless Steel 304 or Steel 1045
15	Stem	Stainless Steel 304 or C95400
16	Stem Nut	C95400
17	Plug	C95400
18	Lifting Nut	CF8 or C95400
19	Pin	Stainless Steel 304
20	Sealing Ring	EPDM

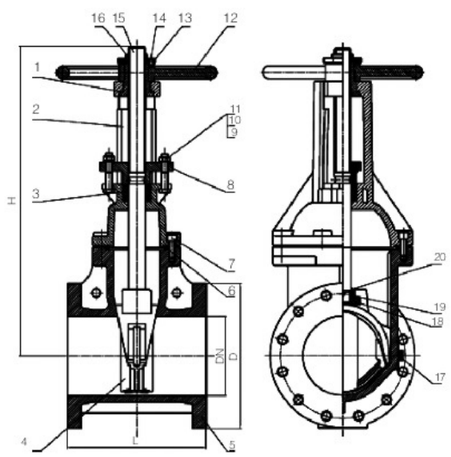

Dimensions

Size	DN	L	D	H
2½"	65	190	178	370
3"	80	203	191	420
4"	100	229	229	447
5"	125	254	254	547
6"	150	267	279	607
8"	200	292	343	754
10"	250	330	406	890
12"	300	356	483	1031

Z81-300A Gate Valve

Resilient Wedge OS & Y Gate Valve - Grooved End

Technical Features

- Nominal Pressure: 300PSI
- Conforms: ANSI/AWWA C515 Standard
- Groove Standard: ANSI/AWWA C606 or Metric
- Face to Face Standard: ASME B1610
- Sizes: 2½", 3", 4", 5", 6", 8", 10", 12"
- Approvals: FM, UL, CUL, NSF / ANSI 61 & NSF / ANSI 372
- Maximum Working Pressure: 300PSI (Maximum Testing Pressure: 600PSI) conforms to UL262, ULC/ORD C262-92, FM 1120 /1130
- Maximum Working Temperature: 80℃ / 176°F
- Coating Details: Epoxy coated interior and exterior by Electrostatic Spray or Coating upon request
- NPT plug on body with 2 operating nuts
- Certified lead-free by NSF/ANSI 61 & NSF ANSI 372 is available

Valve Material List

No.	Description	Material
1	Gasket	Stainless Steel 304 or C95400
2	Bonnet	Ductile Iron
3	Packing	Graphite
4	Disc	Ductile Iron +EPDM
5	Body	Ductile Iron
6	Sealing Ring	EPDM
7	Bolt	Stainless Steel 304 or Steel 1045
8	Gland	Ductile Iron
9	Nut	Stainless Steel 304 or Steel 1045
10	Flat Washer	Stainless Steel 304 or Steel 1045
11	Bolt	Stainless Steel 304 or Steel 1045
12	Handwheel	Ductile Iron
13	Lock Nut	C95400
14	Locating Screw	Stainless Steel 304 or Steel 1045
15	Stem	Stainless Steel 304 or C95400
16	Stem Nut	C95400
17	Plug	C95400
18	Lifting Nut	CF8 or C95400
19	Pin	Stainless Steel 304
20	Sealing Ring	EPDM

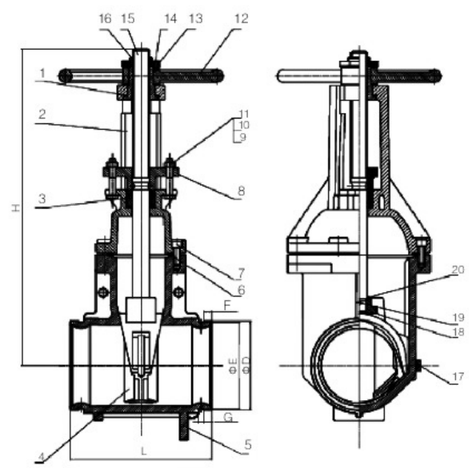

Dimensions

Size	DN	L	F	D	E	G	H
2½"	65	190	15.9	73 76.1	69.1 72.3	7.9	370
3"	80	203	15.9	88.9	84.9	7.9	420
4"	100	229	15.9	114.3	110.1	9.5	447
5"	125	254	15.9	139.7 141.3	135.5 137	9.5	547
6"	150	267	15.9	165.1 168.3	160.8 163.9	9.5	607
8"	200	292	19	216.3 219.1	211.6 214.3	11.1	754
10"	250	330	19	273	268.3	12.7	890
12"	300	356	19	323.9	318.3	12.7	1031

Z45-300A Gate Valve

Resilient Wedge NRS Gate Valve - Flanged End

Technical Features

- Nominal Pressure: 300PSI
- Conforms: ANSI/AWWA C515 Standard
- Face to Face Standard: ASME B16.10
- Sizes: 2", 2½", 3", 4", 5", 6", 8", 10", 12"
- 2" FM only
- Flange Standard: ASME/ANSI B16.1 Class 125 or ASME/ANSI B16.42 Class 150 or BS EN1092-2 PN16 or GB/T9113.1
- Approvals: FM, UL, CUL, NSF/ANSI 61 & NSF/ANSI 372
- Maximum Working Pressure: 300PSI (Maximum Testing Pressure: 600PSI) conforms to UL262, ULC/ORD C262-92, FM 1120/1130
- Maximum Working Temperature: 80℃/176°F
- Coating Details: Epoxy coated interior and exterior by Electrostatic Spray or Coating upon request
- NPT plug on body with 2 operating nuts
- Certified lead-free by NSF/ANSI 61 & NSF/ANSI 372 is available
- With and Without Post Flange are available

Valve Material List

No.	Description	Material
1	Flat Washer	Steel 1045 or Stainless Steel 304
2	Hexagon Socket Screw	Steel 1045 or Stainless Steel 304
3	Sealing Ring	EPDM
4	O-ring	EPDM
5	Sealing Ring	EPDM
6	O-ring	EPDM
7	Bonnet	Ductile Iron
8	Stem	Steel 1045 or Stainless Steel 304
9	Plug	Steel 1045 or Stainless Steel 304
10	Disc	Ductile Iron+EPDM
11	Body	Ductile Iron
12	Sealing Ring	EPDM
13	Retaining Ring	C95400
14	Gland	Ductile Iron
15	Post Flange	Ductile Iron
16	Wrench Nut	Ductile Iron
17	Bolt	Stainless Steel 304 or Steel 1045
18	Washer	Stainless Steel 304 or Steel 1045
19	Hexagon Socket Screw	Stainless Steel 304 or Steel 1045
20	Stem Nut	CF8 or C95400

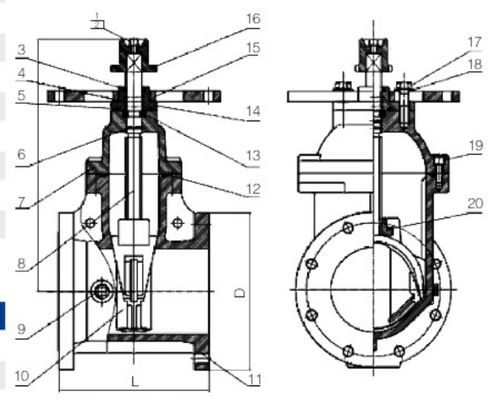

Dimensions

Size	DN	L	D	H
2"	50	178	152	265
2½"	65	190	178	292
3"	80	203	191	322
4"	100	229	229	342
5"	125	254	254	412
6"	150	267	279	448
8"	200	292	343	534
10"	250	330	406	635
12"	300	356	483	720

Z85-300A Gate Valve

Resilient Wedge NRS Gate Valve - Grooved End

Technical Features

- Nominal Pressure:300PSI
- Conforms: ANSI/AWWA C515 Standard
- Groove Standard: ANSI/AWWA C60 or Metric
- Face to Face Standard: ASME B16.10
- Sizes: 2 1/2", 3", 4", 5", 6", 8", 10", 12"
- Approvals: FM, UL, CUL, NSF/ANSI 61 & NSF/ANSI 372
- Maximum Working Pressure: 300PSI (Maximum Testing Pressure: 600PSI) conforms to UL262, ULC/ORD C262-92, FM 1120/1130
- Maximum Working Temperature: 80° C/176F
- Coating Details: Epoxy coated interior and exterior by Electrostatic Spray or Coating upon request
- NPT plug on body with 2 operating nuts
- Certified lead-free by NSFIANSI 61 & NSFIANSI 372 is available
- With and Without Post Flange are available

Valve Material List

No.	Description	Material
1	Flat Washer	Steel 1045 or Stainless Steel 304
2	Hexagon Socket Screw	Steel 1045 or Stainless Steel 304
3	Sealing Ring	EPDM
4	O-Ring	EPDM
5	Sealing Ring	EPDM
6	O-Ring	EPDM
7	Bonnet	Ductile Iron
8	Stem	Stainless Steel 304 or C95400
9	Plug	Stainless Steel 304 or C95400
10	Disc	Ductile Iron +EPDM
11	Body	Ductile Iron
12	Sealing Ring	EPDM
13	Retaining Ring	C95400
14	Gland	Ductile Iron
15	Post Flange	Ductile Iron
16	Wrench Nut	Ductile Iron
17	Bolt	Stainless Steel 304 or Steel 1045
18	Washer	Stainless Steel 304 or Steel 1045
19	Hexagon Socket Screw	Steel 1045 or Stainless Steel 304
20	Stem Nut	CF8 or C95400

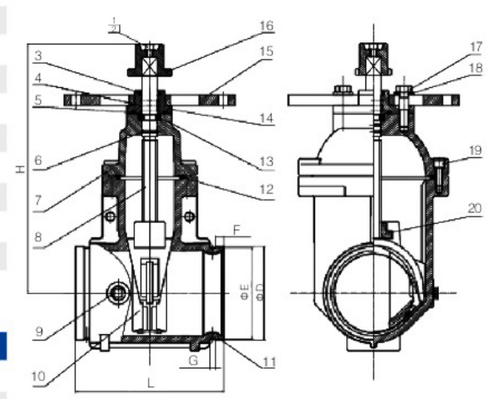

Dimensions

Size	DN	L	F	D	E	G	H
2½"	65	190	15.9	73 76.1	69.1 72.3	7.9	292
3"	80	203	15.9	88.9	84.9	7.9	322
4"	100	229	15.9	114.3	110.1	9.5	342
5"	125	254	15.9	139.7 141.3	135.5 137	9.5	412
6"	150	267	15.9	165.1 168.3	160.8 163.9	9.5	448
8"	200	292	19	216.3 219.1	211.6 214.3	11.1	534
10"	250	330	19	273	268.3	12.7	635
12"	300	356	19	323.9	318.3	12.7	720

Z45-300FJA Gate Valve

Resilient Wedge NRS Gate Valve - Flanged × Mechanical Joint End

Technical Features

- Nominal Pressure: 300PSI
- Conforms: ANSI / AWWA C515 Standard
- Sizes: 2", 3", 4", 6", 8", 10", 12"
- 2" FM only
- Flange Standard: ASME/ANSI B16.1 Class 125 or ASME / ANSI B16.42 Class 150 or BS EN1092-2 PN16 or GB/T9113.1
- Mechanical Standard: ANSI/AWWA 110 or ANSI/AWWA C153
- Approvals: FM, UL, CUL, NSF / ANSI 61 & NSF / ANSI 372
- Maximum Working Pressure: 300PSI (Maximum Testing Pressure: 600PSI) conforms to UL262, ULC/ORD C262-92, FM 1120 / 1130
- Maximum Working Temperature: 80C / 176F
- Coating Details: Epoxy coated interior and exterior by Electrostatic Spray or Coating upon request
- NPT plug on body with 1 operating nut
- Certified lead-free by NSF / ANSI 61 & NSF / ANSI 372 is available
- With and Without Post Flange are available

Valve Material List

No.	Description	Material
1	Flat Washer	Steel 1045 or Stainless Steel 304
2	Hexagon Socket Screw	Steel 1045 or Stainless Steel 304
3	Sealing Ring	EPDM
4	O-ring	EPDM
5	Sealing Ring	EPDM
6	O-ring	EPDM
7	Bonnet	Ductile Iron
8	Stem	Steel 1045 or Stainless Steel 304
9	Plug	Steel 1045 or Stainless Steel 304
10	Disc	Ductile Iron+EPDM
11	Body	Ductile Iron
12	Sealing Ring	EPDM
13	Retaining Ring	C95400
14	Gland	Ductile Iron
15	Post Flange	Ductile Iron
16	Wrench Nut	Ductile Iron
17	Bolt	Stainless Steel 304 or Steel 1045
18	Washer	Stainless Steel 304 or Steel 1045
19	Hexagon Socket Screw	Stainless Steel 304 or Steel 1045
20	Stem Nut	CF8 or C95400

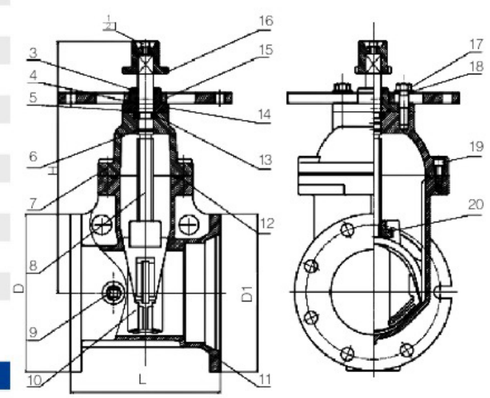

Dimensions

Size	DN	L	D	D1	H
2"	50	178	152	152	265
3"	80	203	191	195	322
4"	100	229	229	232	342
6"	150	267	279	282	448
8"	200	292	343	340	534
10"	250	330	406	399	635
12"	300	356	483	456	720

Z485-300A Gate Valve

Resilient Wedge NRS Gate Valve - Grooved × Flanged End

Technical Features

- Nominal Pressure: 300PSI
- Conforms: ANSI/AWWA C515 Standard
- Sizes: 2", 3", 4", 6, 8", 10", 12"
- 2" FM only
- Mechanical Standard: ANSI/AWWA 110 or ANSI/AWWA C153
- Approvals: FM, UL, CUL, NS F/ ANSI 61 & NSF / ANSI 372
- Maximum Working Pressure: 300PSI (Maximum Testing Pressure: 600PSI) conforms to UL262, ULC / ORD C262-92, FM 1120 / 1130
- Maximum Working Temperature: 80℃ / 176°F
- Coating Details: Epoxy coated interior and exterior by Electrostatic Spray or Coating upon request
- Certified lead-free by NSF/ANSI 61 & NSFIANSI 372 is available
- With and Without Post Flange are available

Valve Material List

No.	Description	Material
1	Flat Washer	Steel 1045 or Stainless Steel 304
2	Hexagon Socket Screw	Steel 1045 or Stainless Steel 304
3	Sealing Ring	EPDM
4	O-Ring	EPDM
5	Sealing Ring	EPDM
6	O-Ring	EPDM
7	Bonnet	Ductile Iron
8	Stem	Stainless Steel 304 or C95400
9	Plug	Stainless Steel 304 or C95400
10	Disc	Ductile Iron +EPDM
11	Body	Ductile Iron
12	Sealing Ring	EPDM
13	Retaining Ring	C95400
14	Gland	Ductile Iron
15	Post Flange	Ductile Iron
16	Wrench Nut	Ductile Iron
17	Bolt	Stainless Steel 304 or Steel 1045
18	Washer	Stainless Steel 304 or Steel 1045
19	Hexagon Socket Screw	Steel 1045 or Stainless Steel 304
20	Stem Nut	CF8 or C95400

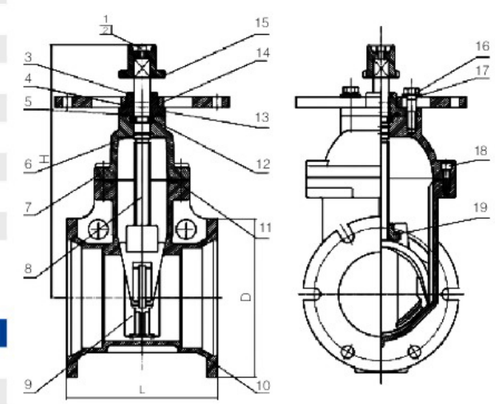

Dimensions

Size	DN	L	D	H
2"	50	178	152	265
3"	80	203	195	322
4"	100	229	232	342
6"	150	267	282	448
8"	200	292	340	534
10"	250	330	399	635
12"	300	356	456	720

Model: Z41Gate Valve

Resilient Wedge OS & Y Gate Valve - Flanged End

Technical Features

- Nominal Pressure: 200PSI
- Flange Standard: ASME/ANSI B161 Class 125 or ASME / ANS B16.42 Class 150 or BS EN1092–2 PN 16 or GB/T9113.1
- Face to Face Standard: ASME B16.10
- Sizes: 2", 2", 3", 4", 5", 6", 8", 10", 12" with FM UL CUL
- 14", 16" with FM only
- Approvals: FM, UL, CUL, NSF/ANSI 61 & NSF / ANSI 372
- Maximum Working Pressure: 200PSI (Maximum Testing Pressure: 400PSI) conforms to UL 262, ULC / ORD C262–92, FM 1120 / 1130
- Maximum Working Temperature: 80℃ / 176°F
- Coating Details: Epoxy coated interior and exterior by Electrostatic Spray or Coating upon request
- NPT plug on body with 2 operating nuts
- Certified lead–free by NSF /ANSI 61 & NSF / ANSI 372 is available

Valve Material List

No.	Description	Material
1	Body	Ductile Iron
2	Disc	Ductile Iron +EPDM
3	Connecting Part	C95400
4	Sealing Pad	EPDM
5	Stem	Stainless Steel 304
6	Yoke	Ductile Iron
7	Bolt	Steel 1045
8	Gland	Ductile Iron
9	Nut	Steel 1045
10	Rotating Nut	C95400
11	Handwheel	Steel 1045
12	Lock Nut	Steel 1045
13	Countersunk Head Bolt	Steel 1045
14	Cylinder Pin	Stainless Steel 304

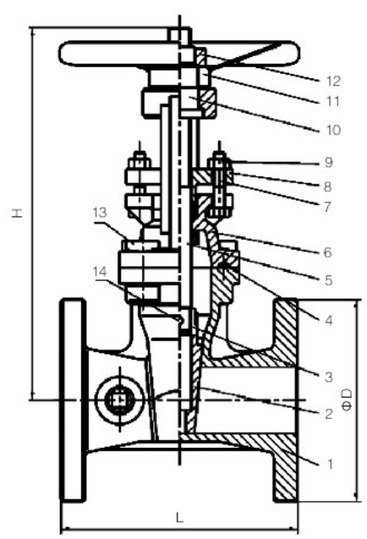

Dimensions

Size	L	H	ΦD
2"	178	313	152
2½"	190	340	178
3"	203	387	191
4"	229	440	229
5"	254	546	254
6"	267	607	279
8"	292	786	343
10"	330	946	406
12"	356	1110	483

Z45 Gate Valve

Resilient Wedge NRS Gate Valve - Flanged End

Technical Features

- Nominal Pressure: 200PSI
- Flange Standard: ASME / ANSI B 16.1 Class 125 or ASME / ANSI B 16.42 Class 150 or BS EN1092–2 PN 16 or GB /T9113.1
- Face to Face Standard: ASME B16.10
- Sizes: 2", 2½", 3", 4", 5", 6", 8", 10", 12"
- Approvals: FM, UL, CUL, NSF / ANSI 61 & NSF / ANSI 372
- 2" without UL, CUL
- Maximum Working Pressure: 200PSI (Maximum Testing Pressure: 400PSI) conforms to UL 262, ULC /ORD C262–92, FM 1120 / 1130
- Maximum Working Temperature: 80℃ / 176° F
- Coating Details: Epoxy coated interior and exterior by Electrostatic Spray or Coating upon request
- NPT plug on body with 2 operating nuts
- Certified lead–free by NSF/ANSI 61& NSFIANSI 372 is available

Valve Material List

No.	Description	Material
1	Body	Ductile Iron
2	Disc	Ductile Iron+EPDM
3	Nut	C95400
4	Gasket	EPDM
5	Stem	Stainless Steel 304
6	Cap	Ductile Iron
7	Retainer Ring	C95400
8	O–ring	EPDM
9	Wrench Nut	Ductile Iron
10	Minipad	Steel 1045
11	Bolt	Steel 1045
12	Stud	Steel 1045
13	Nut	Steel 1045
14	Flat Washer	Steel 1045
15	Coupling Flange	Ductile Iron
16	Platen	Ductile Iron
17	Countersunk Head Bolt	Steel 1045

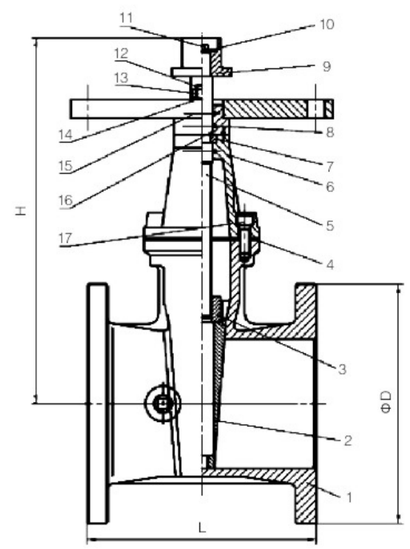

Dimensions

Size	L	H	ΦD
2"	178	265	152
2½"	190	289	178
3"	203	326	191
4"	229	355	229
5"	254	410	254
6"	267	455	279
8"	292	558	343
10"	330	648	406
12"	356	745	483

Resilient Wedge OS & Y Gate Valve - Grooved End

Technical Features

- Nominal Pressure: 200PSI
- Groove Standard: ANSI/AWWA C606 or Metric
- Face to Face Standard: ASME B16.10
- Sizes: 2", 2½", 3", 4", 5", 6", 8", 10", 12"
- Approvals: FM, UL, CUL, NSF / ANSI 61 & NSF / ANSI 372
- Maximum Working Pressure: 200PSI (Maximum Testing Pressure: 400PSI) conforms to UL 262, ULC / ORD C262–92, FM 1120 /1130
- Maximum Working Temperature: 80℃ / 176°F
- Coating Details: Epoxy coated interior and exterior by Electrostatic Spray or Coating upon request
- NPT plug on body with 2 operating nuts
- Certified lead–free by NSF / ANSI 61 & NSF / ANSI 372 is available

Valve Material List

No.	Description	Material
1	Body	Ductile Iron
2	Disc	Ductile Iron +EPDM
3	Connecting Part	C95400
4	Sealing Pad	EPDM
5	Stem	Stainless Steel 304
6	Yoke	Ductile Iron
7	Bolt	Steel 1045
8	Gland	Ductile Iron
9	Nut	Steel 1045
10	Rotating Nut	C95400
11	Handwheel	Steel 1045
12	Lock Nut	Steel 1045
13	Countersunk Head Bolt	Steel 1045
14	Cylinder Pin	Stainless Steel 304

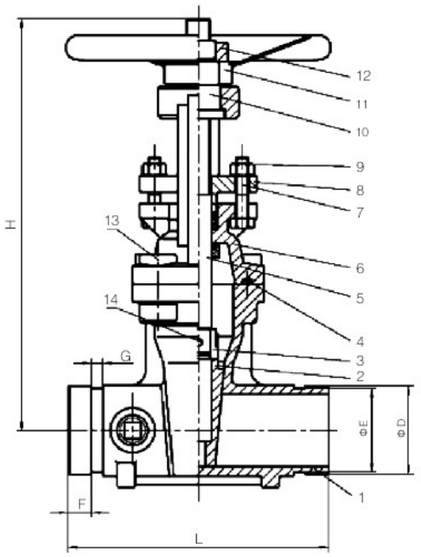

Dimensions

Size	L	H	ΦD	ΦE	F	G
2"	178	313	60.3	57.2	15.9	7.9
2½"	190	340	76.1	72.3	15.9	7.9
3"	203	387	88.9	84.9	15.9	7.9
4"	229	440	114.3	110.1	15.9	9.5
5"	254	546	141.3	137	15.9	9.5
6"	267	607	168.3	163.9	15.9	9.5
8"	292	786	219.1	214.4	19	11.1
10"	330	946	273	268.3	19	12.7
12"	356	1110	323.9	318.3	19	12.7

Resilient Wedge NRS Gate Valve - Grooved End

Technical Features

- Nominal Pressure: 200PSI
- Groove standard : ANSI / AWWA C606 or Metric
- Face to Face Standard: ASME B16.10
- Sizes: 2", 2½", 3", 4", 5", 6", 8", 10", 12"
- Approvals: FM, UL, CUL, NSF / ANSI 61 & NSF / ANSI 3722
- 2" without UL, CUL
- Maximum Working Pressure: 200PSI (Maximum Testing Pressure: 400PSI) conforms to UL 262, ULC / ORD C262–92FM 1120 /1130
- Maximum Working Temperature: 80℃ / 176° F
- Coating Details: Epoxy coated interior and exterior by Electrostatic Spray or Coating upon request
- NPT plug on body with 2 operating nuts
- Certified lead–free by NSF / ANSI 61 & NSF / ANSI 372 is available

Valve Material List

No.	Description	Material
1	Body	Ductile Iron
2	Disc	Ductile Iron+EPDM
3	Nut	C95400
4	Gasket	EPDM
5	Stem	Stainless Steel 304
6	Cap	Ductile Iron
7	Retainer Ring	C95400
8	O–ring	EPDM
9	Wrench Nut	Ductile Iron
10	Minipad	Steel 1045
11	Bolt	Steel 1045
12	Stud	Steel 1045
13	Nut	Steel 1045
14	Flat Washer	Steel 1045
15	Coupling Flange	Ductile Iron
16	Platen	Ductile Iron
17	Countersunk Head Bolt	Steel 1045

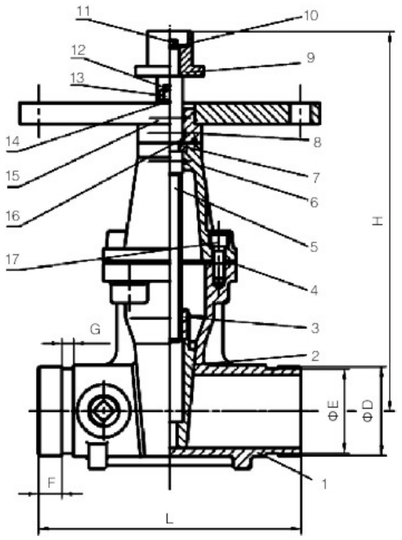

Dimensions

Size	L	H	ΦD	ΦE	F	G
2"	178	265	60.3	57.15	15.9	7.9
2½"	190	289	76.1	72.3	15.9	7.9
3"	203	326	88.9	84.9	15.9	7.9
4"	229	355	114.3	110.1	15.9	9.5
5"	254	410	141.3	137	15.9	9.5
6"	267	455	168.3	163.9	15.9	9.5
8"	292	558	219.1	214.4	19	11.1
10"	330	648	273	268.3	19	12.7
12"	356	745	323.9	318.3	19	12.7

MH-XQH-300 Swing Check Valve

300PSI Flanged Swing Check Valve

Technical Features

- Nominal Pressure: 300PSI
- Conforms: AWWA C508
- Flange Standard: ASME / ANSI B16.1 Class 125 or ASME / ANSI B16.42 Class 150 or BS EN1092-2 PN16 or GB/T9113.1
- Sizes: 2", 2½", 3", 4", 5", 6", 8", 10, 12"
- Face to Face Standard: ASME B16.10
- Approvals: UL, FM
- Maximum Working Pressure: 300PSI (Maximum TestingPressure: 600PSI) conforms to UL 312 & FM Class 1210
- Working Temperature: 80℃ / 176° F
- Coating Details: Epoxy coated interior and exterior by Electrostatic Spray or coating upon request
- Applications:
  Used both vertically and horizontally;
  Used in one-way flow pipeline to prevent the water from back flow

Valve Material List

No.	Description	Material
1	Body	Ductile Iron
2	Bonnet	Ductile Iron
3	Seat Ring	C95400
4	Disc	Ductile Iron+EPDM
5	Rocker Arm	Ductile Iron
6	Baffle Plate	C95400
7	Middle Stem	Stainless Steel 304
8	Stem	Stainless Steel 304
9	Bracket Screw	Stainless Steel 304
10	Plug	C95400
11	Gasket	Stainless Steel 304
12	O-ring	EPDM
13	O-ring	EPDM
14	O-ring	EPDM
15	O-ring	EPDM
16	Bronze Bushing	Powder Metallurgy
17	Nut	Stainless Steel 304
18	Nut	Stainless Steel 304
19	Cotter Pin	Stainless Steel 304
20	Bolt	Steel 1045
21	Bolt	Steel 1045
22	Nut	Steel 1045

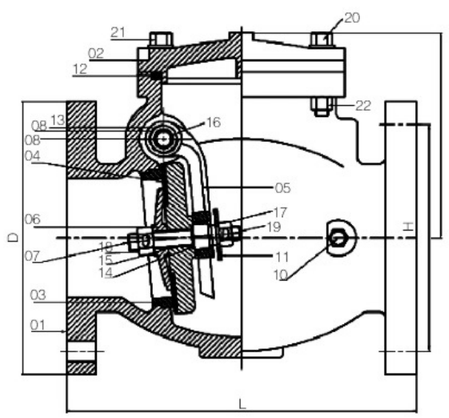

Dimensions

Size	DN	L	D	H
2"	50	203	152	142
2½"	65	216	178	148
3"	80	241	191	163.5
4"	100	292	229	172
5"	125	330	254	237
6"	150	356	279	233
8"	200	495	343	301
10"	250	622	406	348
12"	300	698	483	419

MH-XQH-350G Swing Check Valve

350PSI Grooved Swing Check Valve

Technical Features

- Nominal Pressure: 350PSI
- Groove standard: ANSI/AWWA C606 or Metric
- Sizes: 2", 2½", 3", 4", 5", 6", 8", 10", 12"
- Approvals: UL, FM
- Flange Standard: ASME / ANSI B16.1 Class 125 or ASME/ANSI B16.42 Class 150 or BS EN10922 PN16 or GB/T91131
- Maximum Working Pressure: 350PSI (Maximum TestingPressure: 700 PSI) conforms to UL 312 & FM Class 1210
- Maximum Working Temperature: 80℃ / 176° F
- Coating Details: Epoxy coated interior and exterior by Electrostatic Spray or coating upon request
- Applications: Used in one-way flow pipeline to prevent the water from back flow
- Other Connections: Flange*Flange; Groove*Flange; Flange*Groove

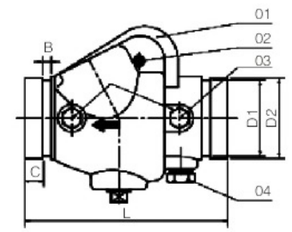

Valve Material List

No.	Description	Material
1	Body	Ductile Iron
2	Bolt	Steel 1045
3	Plug	Steel 1045
4	Plug	Steel 1045
5	Spring	Stainless Steel 304
6	Hinge Pin	Stainless Steel 304 / Ductile Iron
7	Clapper	Stainless Steel 304
8	Seat	C95400
9	Clamping Ring	Stainless Steel 304
10	Locknut	Stainless Steel 304
11	Facing Seal	EPDM
12	Gasket	EPDM
13	Bolt	Stainless Steel 304
14	Plug	Steel 1045

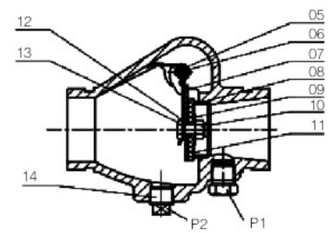

Dimensions

Size	L	D1	D2	B	C	P1	P2						P3		
2"	169	57.15	60.3	7.95	15.88	RC1/2-14	RC1/2-14	RC3/4-14	RC1-11	RC1 1/2-11	RC1 1/2-11	RC2-11	RC1/4-19	RC3/8-19	RC1/2-14
						1/2-14NPT	1/2-14NPT	3/4-14NPT	1-11.5NPT	1 1/4-11.5NPT	1 1/2-11.5NPT	2-11.5NPT	1/4-18NPT	3/8-18NPT	1/2-14NPT
2½"	181	69.09	73	7.95	15.88	RC1/2-14	RC1/2-14	RC3/4-14	RC1-11	RC1 1/4-11	RC1 1/2-11	RC2-11	RC1/4-19	RC3/8-19	RC1/2-14
		72.26	76.1			1/2-14NPT	1/2-14NPT	3/4-14NPT	1-11.5NPT	1 1/4-11.5NPT	1 1/2-11.5NPT	2-11.5NPT	1/4-18NPT	3/8-18NPT	1/2-14NPT
3"	198	84.94	88.9	7.95	15.88	RC1/2-14	RC1/2-14	RC3/4-14	RC1-11	RC1 1/4-11	RC1 1/2-11	RC2-11	RC1/4-19	RC3/8-19	RC1/2-14
						1/2-14NPT	1/2-14NPT	3/4-14NPT	1-11.5NPT	1 1/4-11.5NPT	1 1/2-11.5NPT	2-11.5NPT	1/4-18NPT	3/8-18NPT	1/2-14NPT
4"	214	110.08	114.3	9.53	15.88	RC1/2-14	RC1/2-14	RC3/4-14	RC1-11	RC1 1/4-11	RC1 1/2-11	RC2-11	RC1/4-19	RC3/8-19	RC1/2-14
						1/2-14NPT	1/2-14NPT	3/4-14NPT	1-11.5NPT	1 1/4-11.5NPT	1 1/2-11.5NPT	2-11.5NPT	1/4-18NPT	3/8-18NPT	1/2-14NPT
5"	248	135.48	139.7	9.53	15.88	RC1/2-14	RC1/2-14	RC3/4-14	RC1-11	RC1 1/4-11	RC1 1/2-11	RC2-11	RC1/4-19	RC3/8-19	RC1/2-14
		137.03	141.3			1/2-14NPT	1/2-14NPT	3/4-14NPT	1-11.5NPT	1 1/4-11.5NPT	1 1/2-11.5NPT	2-11.5NPT	1/4-18NPT	3/8-18NPT	1/2-14NPT
6"	270	160.78	165.1	9.53	15.88	RC1/2-14	RC1/2-14	RC3/4-14	RC1-11	RC1 1/4-11	RC1 1/2-11	RC2-11	RC1/4-19	RC3/8-19	RC1/2-14
		163.96	168.3			1/2-14NPT	1/2-14NPT	3/4-14NPT	1-11.5NPT	1 1/4-11.5NPT	1 1/2-11.5NPT	2-11.5NPT	1/4-18NPT	3/8-18NPT	1/2-14NPT
8"	325	211.6	216.3	11.13	19.05	RC1/2-14	RC1/2-14	RC3/4-14	RC1-11	RC1 1/4-11	RC1 1/2-11	RC2-11	RC1/4-19	RC3/8-19	RC1/2-14
		214.4	219.1			1/2-14NPT	1/2-14NPT	3/4-14NPT	1-11.5NPT	1 1/4-11.5NPT	1 1/2-11.5NPT	2-11.5NPT	1/4-18NPT	3/8-18NPT	1/2-14NPT
10"	457	268.3	273	12.7	19.05	RC1/2-14	RC1/2-14	RC3/4-14	RC1-11	RC1 1/4-11	RC1 1/2-11	RC2-11	RC1/4-19	RC3/8-19	RC1/2-14
						1/2-14NPT	1/2-14NPT	3/4-14NPT	1-11.5NPT	1 1/4-11.5NPT	1 1/2-11.5NPT	2-11.5NPT	1/4-18NPT	3/8-18NPT	1/2-14NPT
12"	535	318.3	323.9	12.7	19.05	RC1/2-14	RC1/2-14	RC3/4-14	RC1-11	RC1 1/4-11	RC1 1/2-11	RC2-11	RC1/4-19	RC3/8-19	RC1/2-14
						1/2-14NPT	1/2-14NPT	3/4-14NPT	1-11.5NPT	1 1/4-11.5NPT	1 1/2-11.5NPT	2-11.5NPT	1/4-18NPT	3/8-18NPT	1/2-14NPT

ZSQ Vertical Type Indicator Post

Technical Features

- Approvals: UL, CUL, FM
- Conforms to UL789 & ULC / ORD–C789 & FM 1110
- Adjustable buried length: 570mm to 1500mm
- Used to identify the position of buried Gate Valves from 4" to 12"

Operation Manual

- Remove the indicator cover
- Adjust the length of the connecting rod according to buried depth and cut off the excessive part
- Connect the indicator post and gate valve which is in the closed position
- Adjust the indicator to the position of "SHUT"
- Tighten the bolts between the flange of the indicator post and post flange of gate valve
- Install the indicator cover

Material List

No.	Description	Material
1	Handle	Ductile Iron
2	Driving Rod	Stainless Steel 304
3	Indicator Cover	Cast Iron
4	Housing	Cast Iron
5	Keyhole Plate	A283 Gr.C
6	Indicator Plate	A413.0
7	Screwed Plug	Steel 1035
8	Extension Rod	A283 Gr.C
9	Flange	Cast Iron
10	Connecting Rod	Steel 1045
11	Cotter Pin	Steel 1035
12	Joint	Cast Iron
13	Bolt	Steel 1035
14	Bolt	Steel 1035
15	Bolt	Steel 1035
16	Driving Nut	Stainless Steel 304
17	Keyhole Plate Gasket	EPDM
18	Indicator Flap	Organic Glass
19	Bolt	Steel 1035

Dimensions

Size	H(mm)(200PSI)		H(mm)(300PSI)	
	MIN.	MAX.	MIN.	MAX.
4"	850	1780	825	1755
5"	880	1810	890	1820
6"	917	1847	926	1856
8"	1022	1952	1012	1942
10"	1115	2045	1108	2038
12"	1204	2134	1188	2118

3D Picture

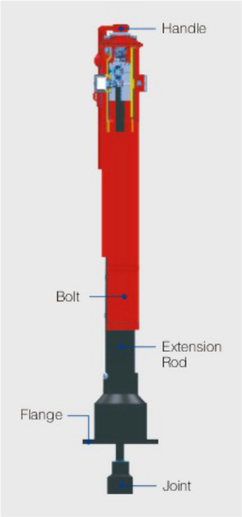

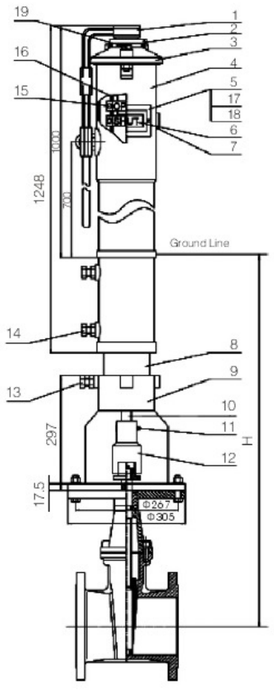

QSCZG Wall Type Indicator Post

Technical Features

- Approvals: UL, CUL, FM
- Conforms to UL789 & ULC / ORD–C789 & FM1110
- Used to Operate a Valve Installed Behind the Wall

Operation Manual

- Adjust the length of the connecting rod according to the depth of gate valve and cut off the excessive part
- Install the indicator post to the wall
- Connect the indicator post and gate valve which is in the closed position
- Adjust the indicator to the position of "SHUT"

Material List

No.	Description	Material
1	Joint	Cast Iron
2	Cotter Pin	Steel 1035
3	Driving Rod	Steel 1045
4	Main Body	Cast Iron
5	Indicator Plate	A413.0
6	Nut, Gasket	Steel 1035
7	Stud Bolt	Steel 1035
8	Position Bracket	Stainless Steel 304
9	Driver	Stainless Steel 304
10	Retainer Ring For Stem	1566
11	Upper Cover	Cast Iron
12	Handwheel	Cast Iron
13	Gasket	A283 Gr.C
14	Lift Ring	Steel 1035
15	Screw	Steel 1035
16	Nut	Steel 1035
17	Bolt	Steel 1035
18	Screwed Plug	Steel 1035
19	Bolt, Flat Gasket	Stainless Steel 304
20	Keyhole Plate	A283 Gr.C
21	Keyhole	Organic Glass
22	Keyhole Plate Gasket	EPDM

3D Pictures

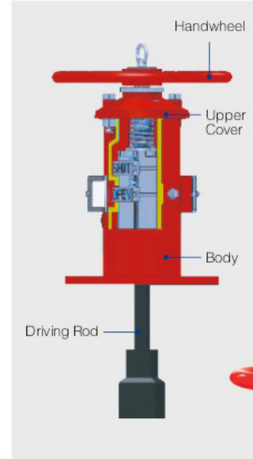

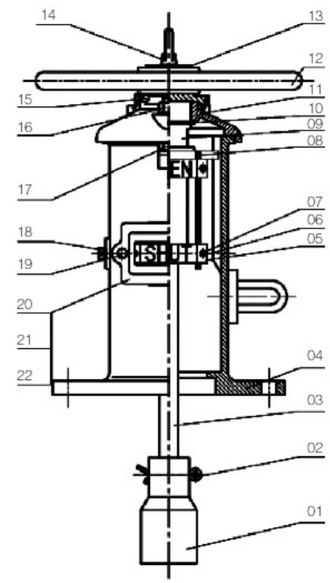

MH-AMARV Air Release Valves

Technical Features

- Designed, manufactured: Accordance with UL 2573 / Fm1344
- Test Standard: UL 2573 / FM1344
- Temperature: 0 to 100℃
- Normal size: 1"
- Normal Pressure: 175PSI
- Test Pressure: Leakage Test 7PSI / 263PSI, Strength Test 350PSI
- Use in wet pipe sprinkler systems, or with horizontal split case pumps
- The inlets of the valves are 1–11 1/2NPT or Rc 1, the outlets of the valves are 1/2– 14NPT or Rc 1/2
- Advantages: This valve can ensure the excellent leak tightness and good venting capabilities under the rated working pressure

Valve Material List

No.	Description	Material
1	Body	Ductile Iron
2	Filter Screen	SS316
3	Gasket Ring	Carbon Steel
4	Bonnet	Ductile Iron
5	Yoke	SS316
6	Seat	SS316
7	Bolt	SS316
8	Valve Shaft	SS316
9	E Type Retainer Ring	SS304
10	Ball	SS316
11	Big Protective Cover	Plastic
12	Lever	SS316
13	Poppet	EPDM
14	Spring Washer	SS316
15	Hex Socket Head Bolt	SS304
16	Asbestos–free Gasket	CN–705
17	Spring Washer	Carbon Steel
18	Bolt	Carbon Steel
19	Plug	Ductile Iron
20	Small Protective Cover	Plastic

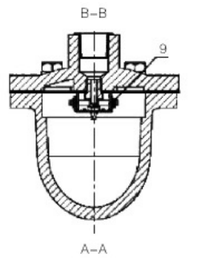

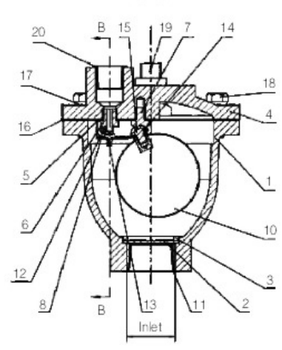

Connections for Installation

- The inlet connections shall be made using the external threads of tapered pipe thread 1–11 1/2NP conforming to the standard ASME B 1.20.1–2013. and the outlet connections shall be made using the external threads of tapered pipe thread 1/2– 14NPT conforming to the standard ASME B 1.20.1–2013.
- The inlet connections shall be made using the external threads of tapered pipe thread R21 conform to the standard ISO 7–1–1994, and the outlet connections shall be made using the external threads of tapered pipe thread R2 1/2 conforming to the standard ISO 7–1–1994.

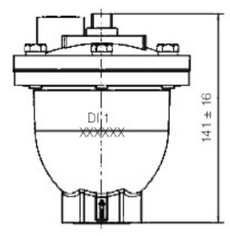

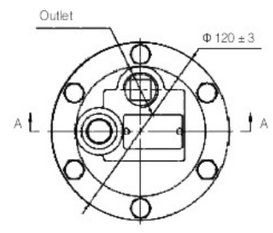

ZSJZ-YM-450 Vane Type Water Flow Switch

Technical Features

- Size: DN50–DN200/2"–8"
- Working Pressure: 450PSI
- Sensitivity:
  FM: 1. No–alarm flow ≤15L/min
  2. Alarm flow >15L/min, ≤75L/min
  UL: 1. No–alarm flow ≤15L/min
  2. Alarm flow >15L/min, ≤37.5L/min
- Capacity of Switch Contacts:
  AC 125 / 250V 8A
  DC 24V 3A
  DC 30V 2.5A
- Working Temperature: 0–49℃
- Steel Pipe: SCH10–40
- 0–90 Seconds Field Replaceable Retard

Technical Information

- Ⅰ. Overview

  The vane type water flow switch use in wet pipe systems only. Water flow in the pipe deflects a vane, which produces a switched output usually after a specified delay

- Ⅱ. Main Components

  ZSJZ series water flow indicator is mainly composed of the saddle, blade rack, bottom plate, outer cover, Air delay device, micro–switch, junction box, etc.

  1. The main outline drawing is shown in Figure 1 Outline Drawing.
  2. Main dimensions of water flow indicator are shown in Table 1.

3. Materials of the main components are shown in Table 2.

Dimensions

Model	Specification	INCH	L	H
ZSJZ–YM–450	DN50	2"	85	188
ZSJZ–YM–450	DN65	2 1/2"	92	200
ZSJZ–YM–450	DN80	3"	106	220
ZSJZ–YM–450	DN100	4"	134	245
ZSJZ–YM–450	DN125	5"	162	272
ZSJZ–YM–450	DN150	6"	189.5	298
ZSJZ–YM–450	DN200	8"	240	350

Table 1

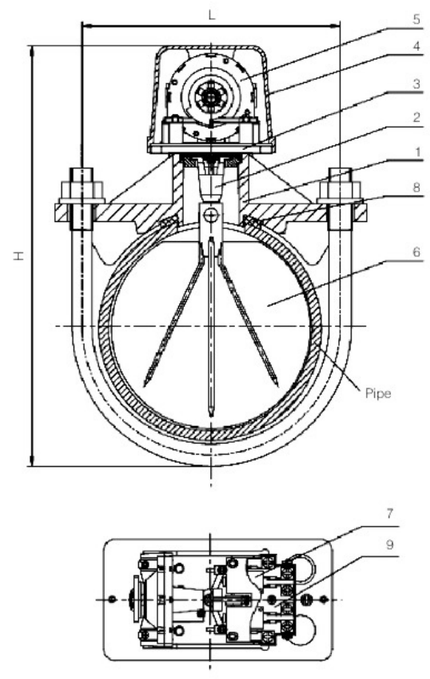

Figure 1 Outline Drawing

ZSJZ-YM-450 Vane Type Water Flow Switch

Installation and Debugging as well as Precautions

- Installation of water flow indicator:

At the pre-set installation position, use a tapper to drill on the main pipeline and remove burrs according to the product specification;

Roll up the blade into a small size and put it into the pipeline, install the U-shaped bolt and fasten it up with two fastening nuts, and the specific installation drawing is shown in Figure 2.

Materials of Main Components

No.	Name	Material
1	Body	Ductile Iron
2	Blade Rack	SS304+EPDM
3	Bottom Plate	SS 304
4	Outer Cover	Aluminum
5	Air Delay Device	Companent
6	Blade	LLDPE
7	Micro-switch	Component
8	Sealing Gasket	EPDM
9	Junction Box	PC

Table 2

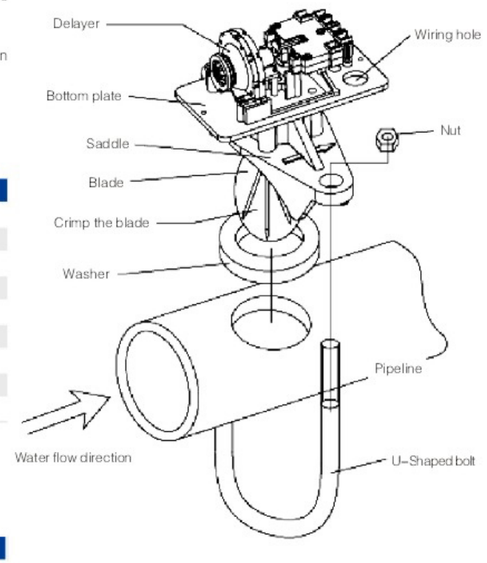

Figure 2 Installation Drawing

The hole size is shown in Table 3

Specification	Hole size
DN50, DN65	32+2mm
DN80-DN200	51+2mm

Table 3

The typical wiring diagram is shown in Figure 3

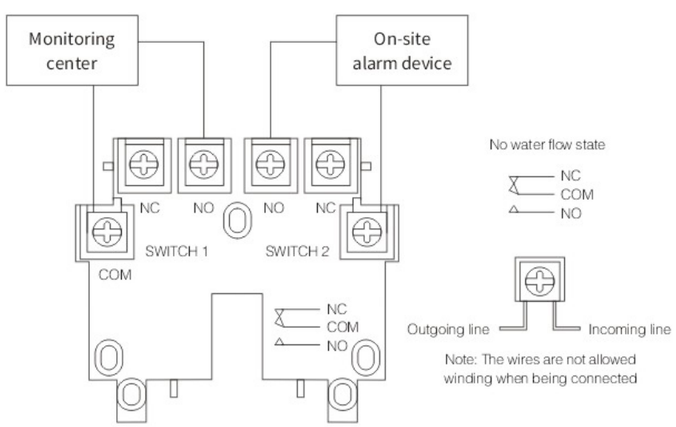

Figure 3

Wet Alarm Check Valve

Flange / Groove / Flange*Groove / Groove*Flange

Technical Features

- Maximum Adjust Pressure: 200PSI-300PSI/PN10/PN16
- Flange Standard: ASME / ANSI B16.1 Class 125 or ASME / ANSI B16.42 Class 150 or BS EN1092-2 PN16 or GB/T9113.1
- Groove Standard: AWWA C606 / ISO 6182-12
- Working Temperature: 4℃-70℃
- Installation Height of the Gong According to Clients' requirements
- Gong can be Installed indoor or outdoor through wall as to clients' requirements
- External Dimensions for reference only
- Coating details: Epoxy coated interior and exterior by Electrostatic Spray or Coating upon request
- Alarm check valves use in wet pipe of sprinkler system, Fire protection system

Material List

No.	Name	Material	QTY.
1	Alarm Valve		1
2	Orifice, retard	C954 / SS304	1
3	Tee	Steel / SS304	2
4	Nipple	Steel / SS304	6
5	Union	Steel / SS304	1
6	Nipple	Steel / SS304	1
7	Y Strainer	C954 / SS304	1
8	Retard Chamber	Steel	1
9	Gong Assembly	Component	1
10	Nipple	Steel / SS304	1
11	Reducer Bushing	Steel / SS304	1
12	Pressure Switch	Component	1
13	Cross	Steel / SS304	1
14	Reducer Bushing	Steel / SS304	1
15	Plug	Steel / C954 / SS304	1
16	Cross	Steel / SS304	2
17	Pressure Gauge	Component	3
18	3-way Valve Gauge	C954 / SS304	3
19	Plug	Steel / C954 / SS304	3
20	Orifice, retard	C954 / SS304	1
21	Check Valve	C954 / SS304	1
22	Nipple	Steel / SS304	1
23	Nipple	Steel / SS304	3
24	Tee	Steel / SS304	2
25	Nipple	Steel / SS304	4
26	Nipple	Steel / SS304	1
27	Nipple	Steel / SS304	1
28	Ball Valve	C954 / SS304	1
29	Nipple	Steel / SS304	1
30	Ball Valve	C954 / SS304	1
31	Elbow	Steel / SS304	2
32	Nipple	Steel / SS304	1
33	Ball Valve	C954 / Ss304	1

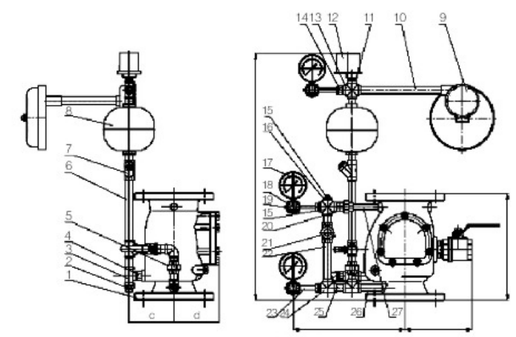

ASSEMBLY DRAWING WITHOUT COMPENSATOR SYSTEM

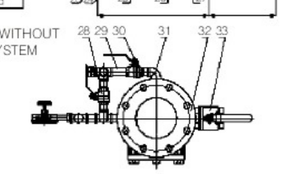

ASSEMBLY DRAWING WITHOUT COMPENSATOR SYSTEM

Dimensions

Size	a	b	c	d
2"	340	205	145	110
2 1/2"	340	205	145	110
3"	340	205	145	110
4"	342	250	160	136
5"	349	274	180	162
6"	349	274	180	162
8"	415	290	205	195
10"	475	340	240	235
12"	495	368	270	270

General Technical Information

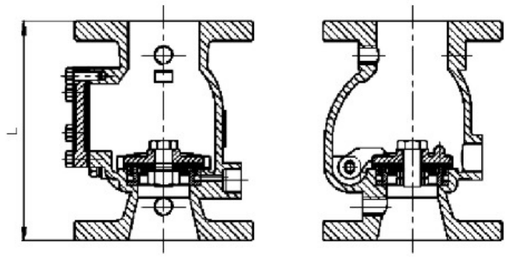

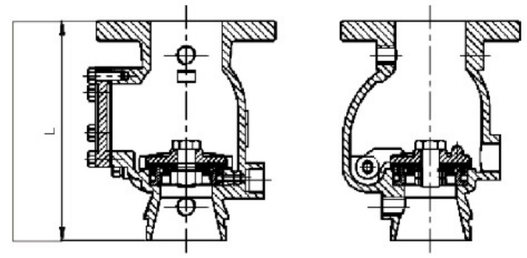

Flange*Flange

Dimensions Chart

Size	L(mm)	L(inch)
DN50(2")	233	9.17
DN65(2 1/2")	236	9.29
DN80(3")	245	9.65
DN100(4")	316	12.44
DN125(5")	386	15.20
DN150(6")	390	15.35
DN200(8")	438	17.24
DN250(10")	535	21.06
DN300(12")	622	24.49

Flange*Groove

Dimensions Chart

Size	L(mm)	L(inch)
DN50(2")	239	9.41
DN65(2 1/2")	240	9.45
DN80(3")	245	9.65
DN100(4")	316	12.44
DN125(5")	386	15.20
DN150(6")	390	15.35
DN200(8")	438	17.24
DN250(10")	535	21.06
DN300(12")	622	24.49

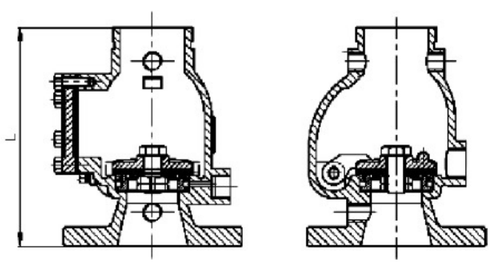

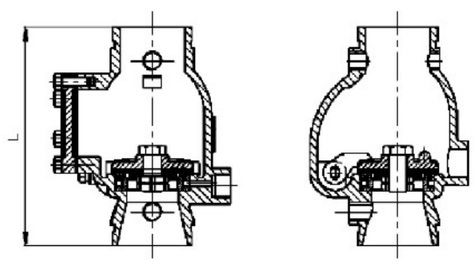

Groove*Flange

Dimensions Chart

Size	L(mm)	L(inch)
DN50(2")	239	9.41
DN65(2 1/2")	240	9.45
DN80(3")	245	9.65
DN100(4")	316	12.44
DN125(5")	386	15.20
DN150(6")	390	15.35
DN200(8")	438	17.24
DN250(10")	535	21.06
DN300(12")	622	24.49

Groove*Groove

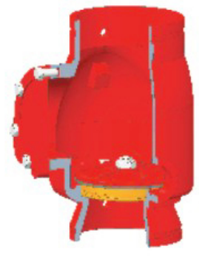

Dimensions Chart

Size	L(mm)	L(inch)
DN50(2")	245	9.65
DN65(2 1/2")	245	9.65
DN80(3")	245	9.65
DN100(4")	316	12.44
DN125(5")	386	15.20
DN150(6")	390	15.35
DN200(8")	438	17.24
DN250(10")	535	21.06
DN300(12")	622	24.49

Technical Features

- Dimension:121mm(4 3/4")*57mm(2 1/4")*111mm(4 3/8")
- Wiring Inlet: 1/2"
- Pressure Connection: Nylon 1/2" NPT thread
- Outer Cover: Die casting with red coating
- Base: Galvanized carbon steel
- Factory Setting: 5–7 PSI (cannot be adjusted after consignment)
- Differential Pressure: 1 PSI(cannot be adjusted after consignment)
- Maximum Working Pressure: 250 PSI
- Switch Contact: double SPDT
- Contact Capacity: 15 Amps under 125/250 VAC, 2.5 Amps under 30 VDC
- Dust Proof and Waterproof Lever: IP66
- Temperature Range: –40℃ to 60℃
- Tamper proof fasteners on outer cover

Technical Specifications

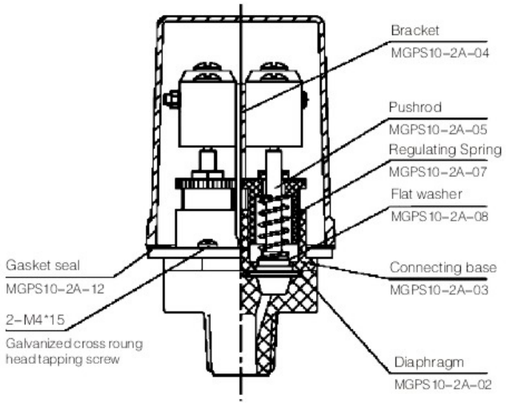

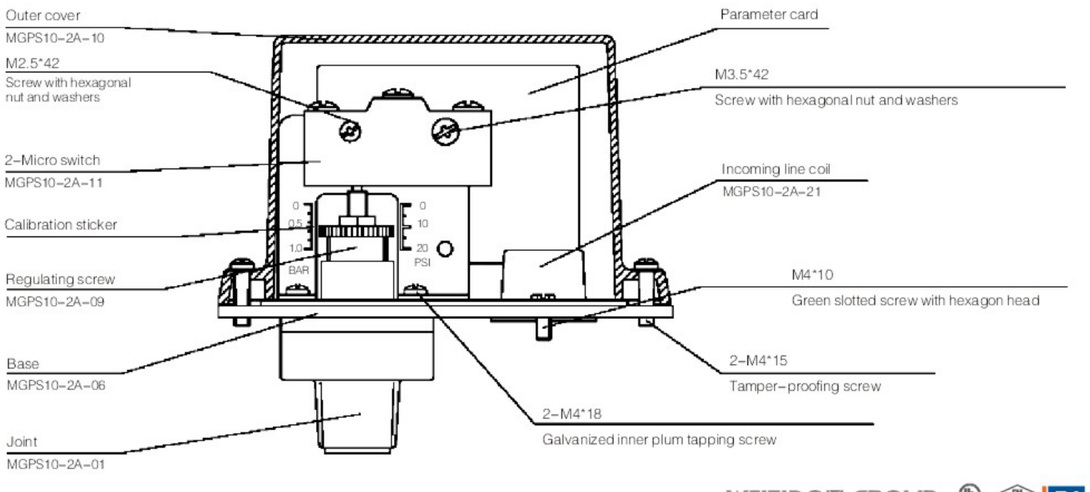

PFE-00A/00B Pressure Gauge

Technical Features

- Pressure Gauge for Fire Protection system
- Designed and manufactured in accordance with UL 393/FM2311
- Test Standard: UL 393/FM2311
- Temperature: 0 to 80℃
- Nominal Size: 1/4" NPT
- Nominal Pressure: 0–300PSI, 0–600PSI

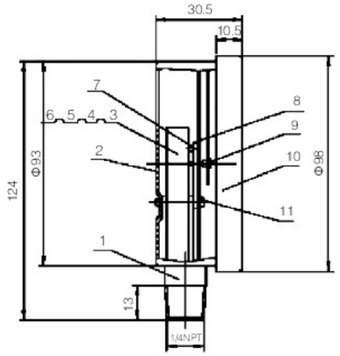

Material List

No.	Name	Material
1	Base	HPb59–1
2	Watchcase	1008
3	Spring pipe	Qsn0.8–2
4	Rivet	HPb59–1
5	Connecting rod	H62
6	Free end	H62
7	Inner core combination	HPb59–1
8	Dial plate	HPb59–1
9	Pointer component	Al
10	Watchcase	PC
11	Rivet column	HPb59–1

MH-SLJL-00 Water Motor Gong

Technical Features

- Designed and manufactured in accordance with Fm1055
- Test Standard: Fm1055
- Temperature: 0 to 100℃
- Nominal Pressure: 0–300PSI

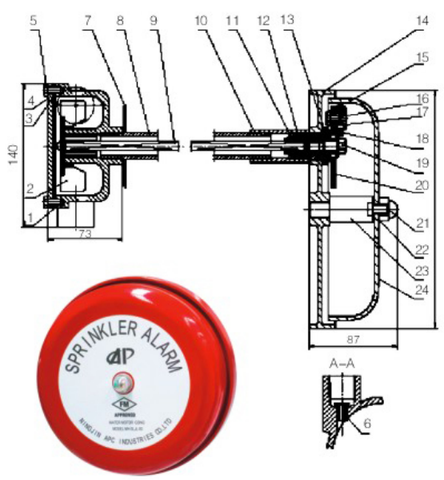

Material List

No.	Name	Material
1	Driver Shell	Aluminium Alloy
2	Impeller	Delrin
3	Sealing Gasket	EPDM
4	Cover	1045 or SS304
5	Bolt	1045 or SS304
6	Nozzle	C954
7	Gasket	1566
8	Support Pipe	1045 or SS304
9	Drive Shaft	Aluminium Alloy
10	Sleeve	1045 or SS304
11	Internal Circlips	SS304
12	Drive Shaft Adaptor	Delrin
13	Supporting Screw	Aluminium Alloy or SS304
14	Bell Seat	Aluminium Alloy
15	Gong	Aluminium Alloy
16	Bolt	Aluminium Alloy or 1045
17	Support Nut	Aluminium Alloy
18	Striker	Phenolic Resin
19	Bolt	Aluminium Alloy or SS304
20	Joint	Aluminium Alloy
21	Screw Nut	Aluminium Alloy or SS304
22	Gasket	Delrin
23	Supporting Post	Aluminium Alloy or SS304
24	Tag	Paper

FIG.1320-300

Specifications

- Multiple End Types for Main Valve:
  Flange by Flange, Flange by Groove, Groove by Groove.
- Pressure Reducing Valve: Reducing a higher up stream pressureinto alower, constant downstream pressure.
- Operates over a wide flow range.
- Set Pressure is adjustable with single screw.
- Can be maintained without removal from the pipe line.
- Flanged to EN1092–2 PN10/PN16, ANSI B16.1 Class125
  (Other available on request)
- Grooved Ends to AWWA C606 Standard.
- Adjustment Range of Outlet Pressure: 65 to 165 psi.
- Rated Working Pressure: 300 psi.
- Fusion Bonded Epoxy Coated Interior and Exterior to AWWA C550 Standard.
- FM 1362 Approved.

Schematic

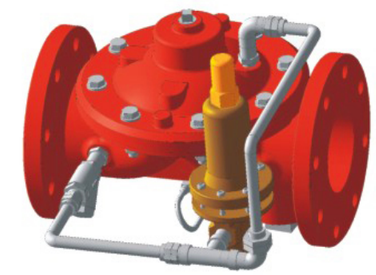

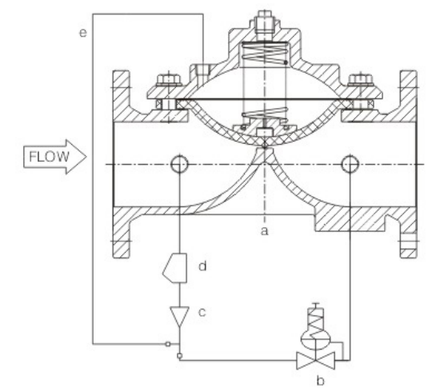

Material Specifications

Part	Material	ASTM Specification
Body	Ductile Iron	A536 Grade 65–45–12
Bonnet	Ductile Iron	A536 Grade 65–45–12
Diaphragm	Nylon Reinforced Natural Rubber/EPDM/NBR	
Spring Retainer	Ductile Iron	A536 Grade 65–45–12
Spring	Stainless Steel	A276 Type 304
Galvanized Bolt	Carbon Steel	A307 Grade B
Galvanized Washer	Carbon Steel	A307 Grade B

NO.	Components	Material
a	Main Valve	
b	Pressure Reducing Pilot	Bronze
c	Restriction Orifice	Stainless Steel 304
d	Y–Strainer	Stainless Steel 304
e	Pipeline	Stainless Steel 304

Main Dimensions(mm/inch)

Size	2	2.5	3	4	5	6	8	10	12
L	233/9.2	290/11.5	310/12.2	356/14.0	370/14.5	436/17.2	530/20.8	636/25	835/32.8

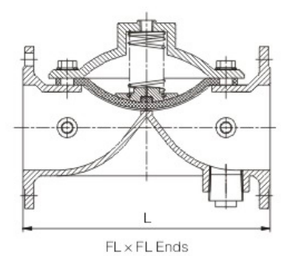

FL × FL Ends

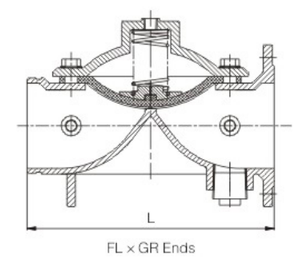

FL × GR Ends

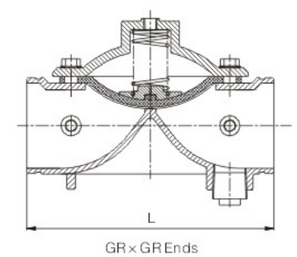

GR × GR Ends

- 2" to 10" valves are FM approved.
- Designs, materials and specifications shown are subject to change without notice due to the continuous development of our products.