ISO9001 CE LISTED APPROVED

WEIZIDOM

WEIZIDOM GROUP

集 团 总 部：中国・郑州华南城中原电商大厦
分　工　厂：上海・天津・河北・山东・温州・连云港
驻外分公司：非洲・坦桑尼亚・赞比亚・肯尼亚

Group headquarters: Central Plains E-Commerce Buliding, Zhengzhou South City, China
Branch Factory: Shanghai, Tianjin, Hebei, Shandong, Wenzhou, lianyungang
Branch Company in Overseas: Tanzania, Zambia, Kenya in Africa

销 售 热 线：+86-13849013722

Sales Hotline: +86-13849013722

www.wsdsolution.com
www.wsdvalves.com

info@wsdvalve.com
weisidun@hawsd.com

www.facebook.com/hawsd

www.linkedin.com/company/henan-wesdom

WEIZIDOM

Chemical Valve Series

WEIZIDOM GROUP

WEIZIDOM GROUP
Enterprise Social Responsibility

WEIZIDOM are not only concerned about products, services and solutions.

WEIZIDOM promise to implement sustainable development and benefit society with energy-saving and environmental protection.

Our Purpose: People–Oriented, Hard Work, Never forget the original intention, Innovation and forge ahead.

Our Mission: To be a high–quality supplier of fluid control systems and plan maker; To contribute our wisdom and strength to the development of the cutting–edge technology of fluid control systems.

Our Vision: Explore the internal innovation spirit and creativity, pursuit, innovation and continuous improvement. Use wisdom, foresight and hard work to make "WEIZIDOM" a world–renowned brand; Make the group company grow into a respectable "Four Satisfaction" enterprise.

Customer Satisfaction: Use high–quality products and refined services to add value to customers.

Employee Satisfaction: People–oriented, build a platform for all employees to realize their dreams, everyone is the CEO.

Partner Satisfaction: Mutual promotion, improve, mutual benefit and win–win.

Shareholder Satisfaction: Enable the company to develop and grow, and return profits.

Our Values: Create differentiated value–added services for customers, let everyone in the company has a sense of accomplishment.

WEIZIDOM GROUP
Development History

2010
WEIZIDOM was established

2015
WEIZIDOM established the first overseas branch

2016
WEIZIDOM products are exported to overseas regions and markets

In December 2010, WESDOM was registered with a registered capital of 5 million yuan;

June 2013, WESDOM passed ISO and other international certifications;

In June 2014, TIANJIN WESDOM VALVE MANUFACTURING CO.,LTD. was established in Tianjin, where the production of butterfly valves is concentrated;

In July 2015, the first overseas branch company WEISIDUN MATERIAL SOLUTION COMPANY was established in the beautiful African continent –Tanzania, and WESDOM began to expand into the international market;

In December 2015, WESDOM established a special foreign trade import and export company in Zhengzhou, the hinterland of the Central Plains HENAN WEISIDUN IMPORT AND EXPORT TRADE CO.,LTD.,to make up for the domestic shortcomings of entering the international market;

In 2016, WESDOM brand products have been exported to Tanzania, Zambia, Egypt, Turkey, Pakistan, Thailand, Indonesia, Vietnam, the Philippines, Saudi Arabia, Mexico and other countries and regions;

In 2017, the company carried out production, procurement adjustments and layouts, expanded product series, initially formed a production and procurement system for water series products (control and connection systems), and established a procurement system for major production clusters across the south and north. ;

2018
Zambia branch was established, and the group company expanded its measurement products series

2019
WESDOM launched a series of plastic materials

2020
WESDOM sales exceeded 20 million USD

2021
Kenya branch is established, WESDOM products occupy the African market

……

In January 2018, the second exclusive import and export company was established –HENAN WESDOM FLOW CONTROL CO.,LTD.In August of the same year, the second overseas branch company –WESDOM VALVES AND FITTINGS COMPANY LIMITED was established in Zambia, Africa;

In 2018, the series of measurement products (water meters, flow meters) were expanded, and the supply chain system was further enriched and improved;

In 2019, a series of plastic material products were launched; the company's valves and pipe fittings passed the CE certification; WESDOM overall sales performance exceeded 90 million in the same year;

In 2020, under the influence of the unfavorable factors of the domestic and foreign epidemic situation, the company has achieved the goal of breaking 100 million yuan in addition to the continuous growth of sales.

In April 2021, the Kenya branch WESDOM VALVES AND FITTINGS(K) CO LIMITED was established and operated well, its products occupy the African market successfully.

To be continued...

WEIZIDOM GROUP

Enterprise Culture

Our Purpose: People–Oriented, Hard Work, Never Forget the Original Intention; Innovation and Forge Ahead.

Our Mission: To be a high–quality supplier of fluid control systems and plan maker; To contribute our wisdom and strength to the development of the cutting–edge technology of fluid control systems.

Our Vision: Explore the internal innovation spirit and creativity, pursuit, innovation and continuous improvement. Use wisdom, foresight and hard work to make "WESDOM" a world–renowned brand; Make the group company grow into a respectable **"Four Satisfaction"** enterprise:

Customer Satisfaction: Use high–quality products and refined services to add value to customers;

Employee Satisfaction: People–oriented, build a platform for all employees to realize their dreams, everyone is the CEO;

Partner Satisfaction: Mutual promotion, improvement, mutual benefit and win–win;

Shareholder Satisfaction: Enable the company to develop and grow, and return profits.

Our Values: Create differentiated value–added services for customers, let everyone in the company has a sense of accomplishment.

Group Introduction

WESDOM Group specializes in pipeline fluid systems: R&D, production and sales of valves, pipe fittings, water meters, flow meters, etc. The products cover cast iron, cast steel, stainless steel, copper, plastics and other materials, which are widely used in hydropower stations, heat, buildings, water supply and drainage, petroleum, chemical industry, electric power, medical and other fields.

In recent years, WESDOM Group has actively embraced the era of Internet of Everything, committed to IOT terminal control and artificial intelligence design, big data mining and development, and promoted smart hardware to move towards big data center and wisdom with excellent market foresight and technological innovation. The smart cities, smart heating, smart water and other fields are in progress.

In the early stage, the Internet of Things smart valves and smart water meters were developed to promote and apply smart control systems such as municipal heating and municipal water supply.

In terms of quality control, we have strict control procedures. From the raw materials entering the factory to the final product leaving the factory, after 24 quality inspection passes, each pass must ensure that the product quality is 100% qualified before it can flow into the next process, thus ensuring that the qualified rate of the finished products. WESDOM products can well meet the Chinese standard like GB, JB, HB; American standard like API, ASME, AWWA; British and EU standards like BS, EN, ISO; German standard DIN; Japanese standard JIS; Russian standard GOST and other standards.

WEIZIDOM GROUP
资质荣誉

Product Quality Control Process

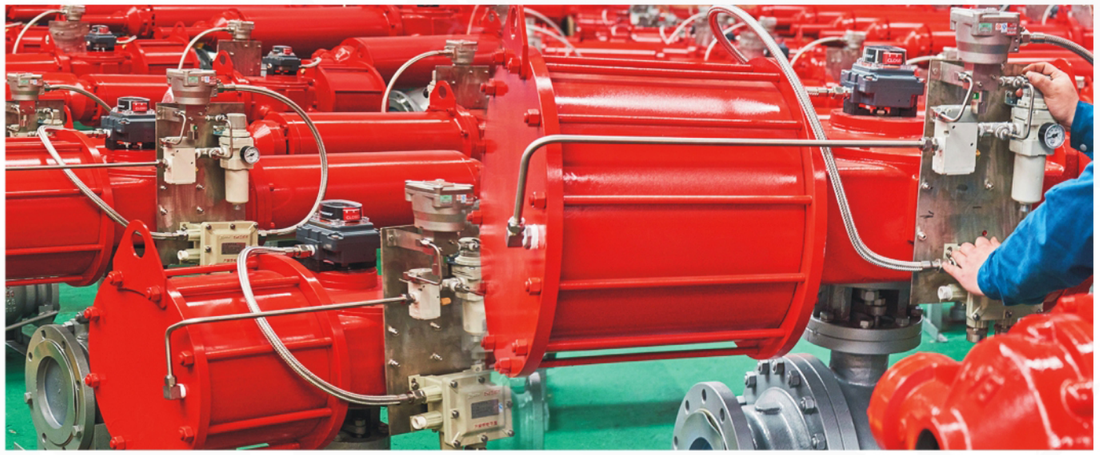

特殊设计、性能可靠，应用于过程控制的

完美解决方案

凭借过程行业多年的应用经验，威斯盾可以为您的控制设备提供一整套的解决方案，以保证其可靠、高效的运行。专门为过程应用而开发的控制阀执行机构可以实现精确的驱动和超乎想象的低故障率。

在一个现代化的过程控制工厂，阀门执行机构动作的传动精度和可靠性尤为重要。无论是直行程的阀门还是角行程的阀门，我们都可以提供符合要求的产品。满足各种恶劣工况，危险环境的使用。

以下是我们的解决方案适用的过程行业一览。
其中包含用于危险区域的产品。

- 化工和石化行业
- 近海和海洋工业
- 石油和天然气行业
- 制药行业
- 制浆和造纸行业
- 食品和饮料行业
- 水处理和污水处理行业
- 矿产开采和冶金行业

目录
Contents

WEIZIDOM
www.wsdsolution.com
www.wsdvalves.com

不锈钢管/管件
Stainless Steel Pipes And Fittings

过程控制
Process Control

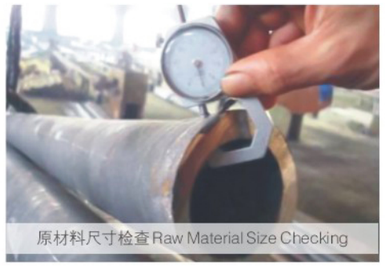
原材料尺寸检查Raw Material Size Checking


原材料分析Raw Material Analysis


碳硫分析Carbon Sulfur Analysis


金相分析Metallography Analysis

我们的产品广泛用于大型石化和能源工程，对任何一个细节的疏忽都可能带来无法预料的后果。因此，对于我们来说，确保每件产品的高度可靠，是至关重要的事情。

我们推行精准化生产流程，对质量进行全过程控制，从原材料采购到生产流程到检验检测都进行严格有效的控制，确保产品的零缺陷和高品质。

通过实施控制把人员、过程和产品联系到一起，促进在质量、生产效率、物流、生产环境、交货和员工参与等方面取得明显改进，确保产品性能在各个环节都始终如一。我们把客户放在第一位，用事实和数据来寻求更好的解决方案，通过质量管理培训、制度规范化、制造标准化、严格评审供应商等措施在每一个环节都确保了产品的卓越品质，使产品质量始终处于国内外信得过产品和具有持续的竞争力。

Our products are widely applied in large petrochemical and energy projects. Negligence upon any detail might result in unpredictable consequence. Therefore, it is vitally important for us to ensure high quality of each product.

We carry out precision production process to conduct effective whole-process control of quality from raw material purchasing to production process control and inspection/testing, thus ensuring zero defect and high quality of products.

Personnel, process and products are linked together through implementation of process control, to obtain improvement in aspects of quality, production efficiency, logistics, production environment, delivery and employee participation, thus ensuring stable product performance in each link. We place customers in the first place, seek better solutions with facts and data, ensure superior quality and make products trustworthy and competitive both nationwide and worldwide through quality control training, system standardization, manufacturing standardization and strict supplier review etc.

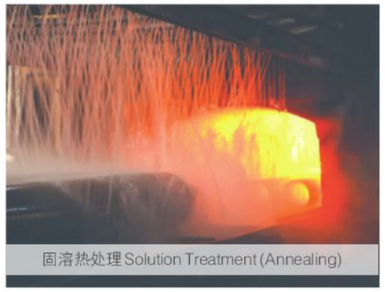
固溶热处理Solution Treatment (Annealing)

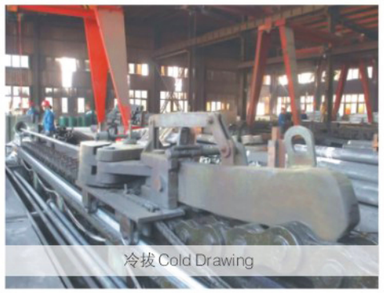
冷拔Cold Drawing

质量保证
Quality Assurance


钢管内壁检查Inside Surface Checking


钢管尺寸检验Thickness Checking


钢管尺寸检验 OD Checking

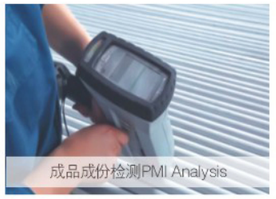
成品成份检测PMI Analysis


成品光谱鉴别Grade Division


力学检验Mechanical Test


钢管硬度HardnessTest


冲击试验Impact Test

齐全的检测手段是确保产品质量的基础，公司拥有涡流探伤、超声波探伤、水压试验、金相分析、力学性能、硬度、碳硫分析、晶间腐蚀、德国直读光谱仪等齐全的检测设施。

Company owns well equiped Laboratory: Chemical composition analyzer, Universal mechanical testing machine, Ultrasonic detector, Eddy Current detector, Hydrostatic testing machine, Germany-imported Spectrometers Intergranular corrosion test machine etc.


冷拔Cold Drawing


钢管平头、倒角Plain Ends, Bevel Ends


钢管中间检验Mid-Term Outside Grinding


钢管修磨 Mid-Term Inside Grinding


钢管矫直Straightening

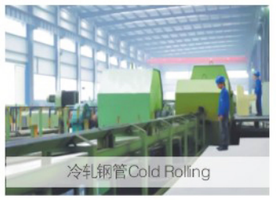
冷轧钢管Cold Rolling


钢管酸洗Pickling

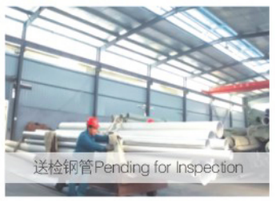
送检钢管Pending for Inspection


钢管无损检测ET(Eddy Current Test)


钢管超声探伤检测UT (Ultrasonic Inspection)

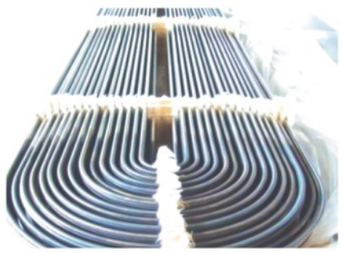

不锈钢无缝管 Stainless Steel Seamless Pipes/Tubes, U-Tubes

名称: 不锈钢无缝管，U型管
Name: Stainelss Steel Seamless Pipes/Tubes, U-Tubes

尺寸范围 Size Range:
OD(6mm-720mm) × Thickness(0.5mm-60mm) × Length: Upto 22 Metre
(OD:1/8"-28")(Thickness: 10S, 40S, 80S, 160S, XXS)

标准和材质 Standard & Grade:

1. Standard: ASTM-A312/A213/A269/A270/A511/A789/A790/B677
   Grade: TP304, TP304L, TP321(H), TP316, TP316L, TP316Ti, TP347H, TP317L, TP310S, 904L(UNS N08904), S31803, 2205....
2. Standard: JIS G3459, JIS G3463
   Grade: SUS 304, SUS 304L, SUS 304H, SUS 304L, SUS 316L,SUS 316Ti, SUS 321, SUS 317, SUS 317L....
3. Standard: GOST 9941-81, GOST 9940-81
   Grade: 08X18H10T(321), 12X18H10T(321H), 10X17H13M2T(316Ti), 03X17H14M2(316L), 08X18H10(304),10X23H18(310S), 20X23H18(310).....
4. Standard: GB/T 14976, GB 13296
   Grade: 0Cr18Ni9, 00Cr19Ni10, 0Cr18Ni10Ti, 00Cr17Ni14Mo2, 1Cr18Ni9Ti, 0Cr25Ni20.....
5. Standard: DIN17456, DIN17458, EN10216
   Grade:1.4301, 1.4306, 1.4541, 1.4550, 1.4401, 1.4436, 1.4404, 1.4571, 1.4435.....

双相不锈钢管 Duplex Stainless Steel Pipe/Tube

名称 Name	双相不锈钢管 Duplex Stainless steel pipe/tube
材质标准 Material Standard	S31803(SAF2205), S32750(SAF2507) ASTM A789, ASTM A790
尺寸范围 Size range	Φ6mm-219mm for S31803; Φ6mm-89mm for S32750
特征 Feature	通过冶金学判定铁素体和奥氏体之间的比例以便查验我们产品的质量 Judge proportion between Ferritic and Austenitic by metallurgy, so as to check our products quality
产品应用 Product application	炼油行业、石油化学行业、造纸行业、化肥行业等 Refining oil industry, petroleum & chemical industry, paper makingindustry, Chemical fertilizer industry, etc

不锈钢盘管 Stainless Steel Coil Tube

名称 Name	不锈钢盘管 Stainless steel coil tube
尺寸范围 Size range	Φ6mm-10mm × 1mm-1.5mm Length:100m-200m
材质 Material	304, 304L, 316L 1.4301, 1.4306, 1.4404, etc
标准 Standard	ASTM A312, ASTM A213, ASTM A269 DIN 2462, DIN 17456 EN 10216-5, EN 10297-2 JS G3463, JIS G3459

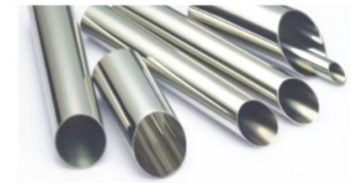

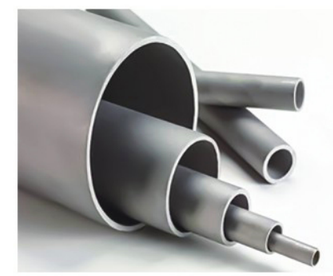

无缝对焊管件的原料来自于我们工厂的钢管库存，优质的原材料决定了其优秀的机械性能和无瑕疵表面。同时，这样的生产设计使得我们拥有更强的市场竞争力。

The raw material of BW Pipe fittings are from our pipes. Excellent raw material gives the fittings better performance in mechanical properties and beautiful surface. In the meantime, this production flow design help us obtain the best competitiveness in the market.

- Stainless Steel Butt Welding Fittings
  Elbows, Tees, Reducers, Caps, Bends, Returns,
  Stub ends, Collars etc
- 1/2" to 24" Seamless type Sch 5S to XXS
  2" to 48" Welded type Sch 5S to XXS
- ASME B16.9, EN 10253-3/4, DIN, JIS, GOST Etc
- SS304/304L, 316/316L, 321/H, 310S, S31803, S32750, 2205, 904L etc

生产工艺流程图
Manufactufing Method And Process

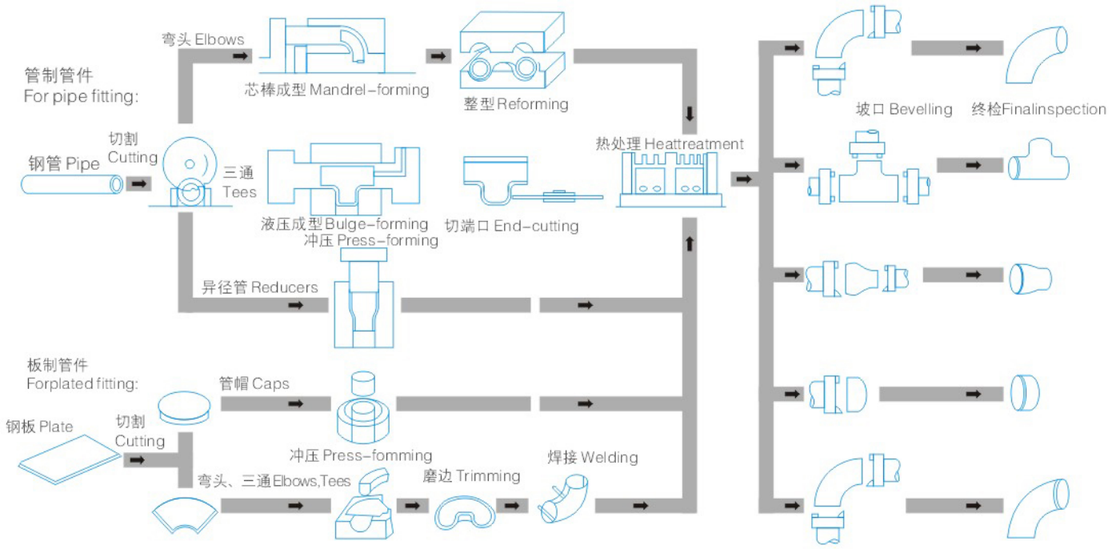

内外标准对照
Comparison Between Domestic and International Specification of Seamless Stainless Pipes/tubes

项目 Item \ 标准 Standard	GB 13296-2007		GB/T 14976-2002		ASTM 2133/A213M	
牌号	00Cr18Ni9 00Cr19Ni10 0Cr25Ni20 0Cr17Ni12mo2 0Cr17Ni14Mo2 0Cr18Ni11Nb	1Cr18Ni9Ti 0Cr18Ni10Ti 0Cr185Ni20Mo2Ti 0Cr19Ni13mo3 00Cr19Ni13Mo3	00Cr18Ni9 00Cr19Ni10 0Cr25Ni20 0Cr17Ni12mo2 0Cr17Ni14Mo2 0Cr18Ni11Nb	1C18Ni9Ti 0C18Ni10Ti 0Cr 185Ni20Mo2Ti 0Cr19Ni13mo3 00Cr19Ni13Mo3	TP301 TP316 TP317 TP347 TP347H△ TP309H*	TP304L TP316L TP310L TP310S TP310H* TP321H△
屈服强度Rp0.2(MPa)	≥175; ≥205		≥175; ≥205		≥170; ≥205	
抗拉强度Rm(MPa)	≥480; ≥520		≥480; ≥520; ≥530		≥485; ≥515	
延伸度A(%)	≥35; ≥40		≥35		≥35	
压扁实验(mm)	t≤10mm H=1.09t/(0.09+t/D)		(选做)t≤10mm H=1.09t/(0.09+t/D)		H=1.09t/(0.09+t/D)并试验完好性	
扩口实验	t≤10mm GB/T242 α=60° 扩18%D		(选做)t≤10mm GB/T242扩18% D/α=30° 45° 或60°		选做内径扩张率为21-68%	
晶粒度					"*"、"△" ASTM E112/ "△"7#或7#上 "*"6#或6#上	
水压试验(MPa)	GB/T 241 P=2Rt/D式中R=50%Rp0.2 Pmax=20 MPa GB/T 7735B级可不做水压		GB/T 241 P=2Rt/D式中R=40%Rp0.2 可用超声或涡流探伤代替 GB4163 12%t或GB/T7735A级		D / Pmax <25.4 / 7 25.4-<38.1 / 10 38.1-<50.8 / 14 50.8-<76.2 / 17 76.2-<127 / 24 ≥127 / 31 水压试验P=220.6t/D 用户指定可 由无损探伤代替	
晶腐试验	GB/T 4334.5		GB/T 4334.5		ASTM A262法(补充要求)	
无损探伤	GB/T 5777 C级		经双方协定，可选做超声		ASTM E213 E309 E426	
热处理(固溶)	要求		要求		要求	
外径偏差(mm)	外径	允许偏差	外径	普通级 / 较高级	外径	允许偏差
					<25.4	+0.10
	6-30	+0.15/-0.20	6-10	±0.20 / ±0.15	25.4-≤38.1	±0.15
					>38.1-<50.8	±0.20
			>10-30	±0.30 / ±0.20	50.8-<63.5	±0.25
	>30-50	+0.30			63.5-<76.2	±0.30
			>30-50	±0.40 / ±0.30	76.2-≤101.6	+0.38
	≤50	±0.75%D			>101.6-≤190.5	±0.38/-0.64
			>50	±0.9%D / ±0.8%D	>190.5-≤228.6	±0.38/-1.14
壁厚偏差(mm)	壁厚	允许偏差	壁厚	普通级 / 较高级	外径	允许偏差
	D≤38	+20%t/-0	0.5-1	±0.15 / ±0.12	≤38.1	+20%-0
			>1-3	±14%t / ±12%t-10%t		
	D>38	+22%t/-0	>3	±12%t-10%t / ±10%t	>38.1	+22%-0
弯曲度(mm/m)	T≤15mm/t>15mm	1.5/1.5	T≤15mm/t>15mm	1.5/2.0	合理的直度	
其他要求	可选做硬度试验HRB<90				HRB<90	

项目 Item \ 标准 Standard	ASTM A312/A312M		JIS G 3463		EN10216-5	
牌号	TP304 TP316 TP317 TP347 TP309H*	TP304L TP316L TP317L TP310S TP310H* TP321H△	SUS 304TB SUS 316TB SUS 317TB SUS 310TB SUS 321TB SUS 321HTB*	SUS 304LTB SUS 316LTB SUS 317LTB SUS 310STB SUS 347TB SUS 347HTB SUS 304HTB	X5Cr18-10 X2Cr19-11 X5CrNiMo17-12-2 X2CrNiMo18-14-3 X6CrNiTi18-10	1.4301 1.4306 1.4401 14404 1.4541
屈服强度Rp0.2(MPa)	≥170; ≥205		≥170; ≥206		≥180; ≥205	
抗拉强度Rm(MPa)	≥485; ≥515		≥481; ≥520		≥460; ≥510	
延伸度A(%)	≥35		≥27; ≥35		≥35; ≥40	
压扁实验(mm)	H=1.09t/(0.09+t/D)并试验完好性		H=1.09t/(0.09+t/D)		H=1.09t/(0.09+t/D)并试验完好性	
扩口实验			a=60° 扩12%D		a=60° 9%; 15%; 17%	
晶粒度	"*"、"△" ASTM E1126或6#上		"*"、JSG0551 7#或7#上			
水压试验(MPa)	D / Pmax ≤88.9 / 17 >88.9 / 19 ASTM A530/A530M D≤270mm P=2Rt/D 式中R=50% Rp0.2		P=2Rt/D 式中R=a b/4 可用无损探伤代替		P=2Rt/D 式中R=70%Rp0.2	
晶腐试验	ASTM A262法(补充要求)		JS G0575(特殊要求)		ENISO3651-2(A/B/C级)	
无损探伤	ASTIM E213 E309 E426		可选涡流或超声探伤涡流JS G0583EV 超声JIS G0582 UD		纵向缺陷检测 按照EN10246-7;横向缺陷检测 按照 EN10246-6;夹层缺陷检测按照EN10246-17	
热处理(固溶)	要求		要求		要求	
外径偏差(mm)	外径	允许偏差	外径	允许偏差	公差等级	允许偏差
	10.3-48.3	+0.40/-0.80	<60	±0.25		
	>48.3-114.3	+0.80/-0.80	≥60-<80	±0.30		
	>114.3-219.1	+1.60/-0.80	≥80-<100	±0.40	D3	±0.75% or ±0.3mm取大值
	>219.1>457.2	+2.40/-0.80	≥100-<120	+0.40/-0.60		
	>457.2-660.4	+3.20/-0.80	≥120-<160	+0.40/-0.80		
	>660.4-864	+4.00/-0.80	≥160-<200	+0.40/-1.20	D4	±0.5% or ±0.1mm取大值
	>864-1219.2	+4.80/-0.80	≥200	+0.40/-1.60		
壁厚偏差(mm)	±12.5%		偏差 / 壁厚 \ 外径	D<40 / D≥40	公差等级	允许偏差
			T<2	+0.4/0 / +20%t/0	T3	+10% or ±0.2mm取大值
			T≥2	+20%t/0 / +20%t/0	T4	±7.5% or ±0.15mm取大值
弯曲度(mm/m)	合理的直度		实用性平直			
其他要求	HRB<90		硬度HRB<90(特殊要求)			

化学成分要求
Requirements For Chemical Components

牌号 Grade	代号 WS	代学成分 Chemical Composition																
		碳,最大[B] Carbon, Maximum	锰,最大[B] Manganese Maximum	磷,最大 Phosphorus Maximum	硫,最大 Sulfur Maximum	硅 Silicon	镍 Nickel	铬 Chromium	铝 Aluminum	钛 Titanium	钙+钽 Calcium+Tantalum	钽,最大 Tantalum Maximum	氮[C] Nitrogen	钒 Vanadium	铜 Copper	铈 Cerium	硼 Boron	铝 Aluminum
TP304	S30400	0.08	2.00	0.040	0.030	0.075max	8.00–11.0	18.0–22.0	–	–	–	–	–	–	–	–	–	–
TP304H	S30409	0.04–0.10	2.00	0.040	0.030	0.075max	8.00–11.0	18.0–20.0	–	–	–	–	–	–	–	–	–	–
TP304L	S30403	0.35	2.00	0.040	0.030	0.075max	8.00–13.0	18.0–20.0	–	–	–	–	–	–	–	–	–	–
TP304N	S30451	0.08	2.00	0.040	0.030	0.075max	8.00–11.0	18.0–20.0	–	–	–	–	0.10–0.16	–	–	–	–	–
TP309H	S30909	0.04–0.10	2.00	0.040	0.030	0.075max	12.0–15.0	22.0–24.0	–	–	–	–	–	–	–	–	–	–
TP309S	S30908	0.08	2.00	0.045	0.030	0.075max	12.0–15.0	22.0–24.0	0.75max	–	–	–	–	–	–	–	–	–
TP310H	S31009	0.04–0.10	2.00	0.045	0.030	0.075max	19.0–22.0	24.0–26.0	–	–	–	–	–	–	–	–	–	–
TP310S	S31008	0.08	2.00	0.045	0.030	0.075max	19.0–22.0	24.0–26.0	0.75max	–	–	–	–	–	–	–	–	–
TP316	S31600	0.08	2.00	0.040	0.030	0.075max	11.0–14.0°	16.0–18.0	2.00–3.00	–	–	–	–	–	–	–	–	–
TP316H	S31609	0.04–0.10	2.00	0.040	0.030	0.075max	11.0–14.0°	16.0–18.0	2.00–3.00	–	–	–	–	–	–	–	–	–
TP316L	S31603	0.035	2.00	0.040	0.030	0.075max	10.0–14.0°	16.0–18.0	2.00–3.00	–	–	–	–	–	–	–	–	–
TP316N	S31651	0.08	2.00	0.040	0.030	0.075max	11.0–14.0°	16.0–18.0	2.00–3.00	–	–	–	0.10–0.16	–	–	–	–	–
TP316LN	S31653	0.035	2.00	0.040	0.030	0.075max	11.0–14.0	16.0–18.0	2.00–3.00	–	–	–	0.10–0.16	–	–	–	–	–
TP317L	S31703	0.035	2.00	0.040	0.030	0.075max	9.00.13.0	18.0–20.0	3.00–4.00	–	–	–	–	–	–	–	–	–
TP321	S32100	0.08	2.00	0.040	0.030	0.075max	9.00–13.0	17.0–20.0	–	Ti:0.7 > 5 × (C+N)	–	–	–	–	–	–	–	–
TP321H	S32109	0.04.0.10	2.00	0.040	0.030	0.075max	9.00.13.0	17.0–20.0	–	–	–	–	–	–	–	–	–	–
TP347	S34700	0.08	2.00	0.040	0.030	0.075max	9.00–13.0	17.0–20.0	–	–	–	–	–	–	–	–	–	–
TP347H	S34709	0.04–0.10	2.00	0.040	0.030	0.075max	9.00–13.0	17.0–20.0	–	–	–	–	–	–	–	–	–	–

A、按照ASTM E527标准和SAEJ1086标准关于金属和合金编号(UNS)方法建立的新代号。
B、最大值，除非另有规定。
C、氨的分析方法应经需方与生产厂协商同意。
D、牌号TP316、TP315N、TP316LN和TP316H的焊接钢管，其含镍量应在10.0～14.0%范围内。
E、需要多道次拉拔的小直径或薄壁钢管或小直径薄壁钢管，其牌号TP304L和TP316L的含碳量必须不大于0.040%，小直径钢管是指外径小于0.500英寸(12.7毫米)钢管，而薄壁钢管是指平均壁厚小于0.069英寸(1.20毫米)[最小壁厚0.44英寸(1.10毫米)]的钢管。
F、钛含量应不小于含碳量的五倍，但不大于0.70%。
G、钛含量应不小于含碳量的四倍，但不大于0.60%。
H、铌加钽含量应不小于含碳量的十倍，但不大于1.00%。
I、铌加钽含量应不小于含碳量的八倍，但不大于1.0%。
J、焊接钢管，其含碳量应不大于0.045%。

A. New coded based on UNS in ASTM E527 and ASEJ108.
B. Maximum value, unless otherwise specified.
C. The analytical method of ammonia shall be aqreed upon between customer and factory.
D. The nickel content of TP316, TP315N, TP316LN and TP316H welded steel pipe shall be between 10.0~14.0%.
E. For small diameter, thin-walled , or small diameter thin-walled steel pipe that would suffer from frequent pull, the carbon content in TP304L and TP316L shall not be higher than 0.040%. Small diameter steel pipe refers to pipe with an outside diameter less than 0.500 inch(12.7mm), thin-walled steel pipe refers to pipe with an average wall thickness less than 0.069 inch(1.20mm) and with a minimun wall thickness of 0.44 inch (1.10mm).
F. Titanium contedn shall be no less than the five times of carbon content, but no more than 0.70%.
G. Titanium content shall be no less than the four times of carbon content, but no more than 0.60%.
H. Niobium+tantalum content shall be no less than the ten times of carbon content, but no more than 1.00%
I. Niobium+tantalum content shall be no less than the eight times of carbon conent, but no more than 1.0%.
J. The carbon content of welded steel pipe shall not be higher than 0.045%.

JISG 3459

Nominal Diameter			Nominal wall thickness															
			SCH 5S			SCH 10S			SCH 20S			SCH 40S			SCH 80S		
A	B	0.D (mm)	W.T (mm)	Weight(kg/m) Type 304 304L	Weight(kg/m) Type 316 316L	W.T (mm)	Weight(kg/m) Type 304 304L	Weight(kg/m) Type 316 316L	W.T (mm)	Weight(kg/m) Type 304 304L	Weight(kg/m) Type 316 316L	W.T (mm)	Weight(kg/m) Type 304 304L	Weight(kg/m) Type 316 316L	W.T (mm)	Weight(kg/m) Type 304 304L	Weight(kg/m) Type 316 316L
6	1/8	10.5	1.0	0.237	0.238	1.2	0.278	0.280	1.5	0.336	0.338	1.7	0.373	0.375	2.4	0.484	0.487
8	1/4	13.8	1.2	0.377	0.379	1.65	0.499	0.503	2.0	0.588	0.592	2.2	0.636	0.640	3.0	0.807	0.812
10	3/8	17.3	1.2	0.481	0.484	1.65	0.643	0.647	2.0	0.762	0.767	2.3	0.859	0.865	3.2	1.12	1.13
15	1/2	21.7	1.65	0.824	0.829	2.1	1.03	1.03	2.5	1.20	1.20	2.7	1.32	1.33	3.7	1.66	1.67
20	3/4	27.2	1.65	1.05	1.06	2.1	1.31	0.32	2.5	1.54	1.55	2.9	1.76	1.77	3.9	2.26	2.28
25	1	34.0	1.65	1.33	1.34	2.8	2.18	2.19	3.0	2.32	2.33	3.4	2.59	2.61	4.5	3.31	3.33
32	1 1/4	42.7	1.65	1.69	1.40	2.8	2.78	2.80	3.0	2.97	2.99	3.6	3.51	3.53	4.9	4.61	4.64
40	1 1/2	48.6	1.65	1.93	1.61	2.8	3.19	3.21	3.0	3.41	3.43	3.7	4.14	4.16	5.1	5.53	5.56
50	2	60.5	1.65	2.42	2.43	2.8	4.02	4.05	3.5	4.97	5.00	3.9	5.50	5.53	5.5	7.54	7.58
65	2 1/2	7.65	2.1	3.88	3.91	3.0	5.48	5.54	3.5	6.35	6.39	5.2	9.21	9.26	7.0	12.1	12.2
80	3	89.1	2.1	4.55	4.58	3.0	3.43	6.48	4.0	8.38	8.53	5.5	11.5	11.5	7.6	15.4	15.5
90	3 1/2	101.6	2.1	5.20	5.24	3.0	7.37	7.42	4.0	9.72	7.79	2.7	13.6	13.7	8.1	18.9	19.0
100	4	114.3	2.1	5.87	5.91	3.0	8.32	8.37	4.0	11.0	11.1	6.0	16.2	16.3	8.6	22.6	22.8
125	5	139.8	2.8	9.56	9.62	3.4	11.6	11.6	5.0	16.8	16.9	6.6	21.9	22.0	9.5	30.8	31.0
150	6	165.2	2.8	11.3	11.4	3.4	13.7	13.8	5.0	20.0	20.1	7.1	28.0	28.1	11.0	42.3	42.5
200	8	216–3	2.8	14.9	15.0	4.0	21.2	21.3	6.5	34.0	34.2	8.2	42.5	42.8	12.7	64.4	64.8
250	10	267.4	3.4	22.4	22.5	4.0	26.2	26.4	6.5	52.2	42.5	9.3	59.8	60.2	15.1	94.9	95.5
300	12	318.5	4.0	31.3	32.5	4.5	35.2	35.4	6.5	50.5	50.8	10.3	79.1	79.6	17.4	131	131
350	14	355.6	–	–	–	–	–	–	–	–	–	11.1	95.3	95.9	19.0	159	160
400	16	406.4	–	–	–	–	–	–	–	–	–	12.7	125	125	21.4	205	207
450	18	457.2	–	–	–	–	–	–	–	–	–	14.3	158	159	23.8	257	259
500	20	508.0	–	–	–	–	–	–	–	–	–	15.1	185	187	26.2	314	316
550	22	558.8	–	–	–	–	–	–	–	–	–	15.9	215	216	28.6	378	380
600	24	609.6	–	–	–	–	–	–	–	–	–	17.5	258	260	31.0	447	450
650	26	660.4	–	–	–	–	–	–	–	–	–	18.9	302	304	34.0	531	534

无缝钢管ASTM A312 外径壁厚对照表(ANSI B36.19)

TP304	Outside Diameter		Nominal Wall Thickness																	
			Schedule 5S[A]		Schedule 10S[A]		Schedule 40S		Schedule 80S		Schedule 100S		Schedule 120S		Schedule 140S		Schedule 160S		Schedule XXS	
	in	mm	in	mm	in	mm	in	mm	in	mm	in	mm	in	mm	in	mm	in	mm	in	mm
1/2	0.405	10.29	–	–	0.049	1.24	0.068	1.73	0.095	2.41	–	–	–	–	–	–	–	–	–	–
1/4	0.540	13.72	–	–	0.065	1.65	0.088	2.24	0.119	3.02	–	–	–	–	–	–	–	–	–	–
3/8	0.675	17.15	–	–	0.065	1.65	0.091	2.31	0.126	3.20	–	–	–	–	–	–	–	–	–	–
1/2	0.840	21.34	0.065	1.65	0.083	2.11	0.109	2.77	0.147	3.73	–	–	–	–	–	–	0.19	4.78	0.29	7.47
3/4	1.050	26.67	0.065	1.65	0.083	2.11	0.113	2.87	0.1S4	3.91	–	–	–	–	–	–	0.22	5.56	0.31	7.82
1	1.315	33.40	0.065	1.65	0.109	2.77	0.133	3.38	0.179	4.55	–	–	–	–	–	–	0.25	6.35	0.36	9.09
1 1/4	1.660	42.16	0.065	1.65	0.109	2.77	0.140	3.56	0.191	4.85	–	–	–	–	–	–	0.25	6.35	0.38	9.70
1 1/2	1.900	48.26	0.065	1.65	0.109	2.77	0.145	3.68	0.200	5.08	–	–	–	–	–	–	0.28	7.14	0.40	10.15
2	2.375	60.33	0.065	1.65	0.109	2.77	0.154	3.91	0.218	5.54	–	–	–	–	–	–	0.36	8.74	0.43	11.07
2 1/2	2.875	73.03	0.083	2.11	0.120	3.05	0.203	5.16	0.276	7.01	–	–	–	–	–	–	0.38	9.53	0.55	14.02
3	3.500	88.90	0.083	2.11	0.120	3.05	0.216	5.49	0.300	7.62	–	–	–	–	–	–	0.44	11.13	0.60	15.24
3 1/2	4.000	101.60	0.083	2.11	0.120	3.05	0.226	5.74	0.318	8.08	–	–	–	–	–	–	–	–	–	–
4	4.500	114.30	0.083	2.11	0.120	3.05	0.237	6.02	0.337	8.56	–	–	0.44	11.12	–	–	0.53	13.49	0.67	17.12
5	5.563	141.30	0.109	2.77	0.134	3.40	0.258	6.55	0.375	9.52	–	–	0.50	12.70	–	–	0.63	15.88	0.75	19.05
6	6.625	168.28	0.109	2.77	0.134	3.40	0.280	7.11	0.432	10.97	–	–	0.56	14.27	–	–	0.72	18.26	0.86	21.95
8	8.625	219.08	0.109	2.77	0.148	3.76	0.322	8.18	0.500	12.70	0.59	15.09	0.76	19.26	1.05	20.62	0.91	23.01	0.88	22.23
10	10.750	273.05	0.134	3.40	0.165	4.19	0.365	9.27	0.500[B]	12.70[B]	0.76	19.26	0.84	21.44	1.00	25.40	1.13	28.58	1.00	25.40
12	12.750	323.85	0.156	3.96	0.180	4.57	0.375[B]	9.52[B]	0.500[B]	12.70[B]	0.84	21.44	1.00	25.40	1.13	28.58	1.31	33.32	1.00	25.40
14	14.000	355.60	0.156	3.96	0.188[B]	4.78[B]	–	–	–	–	0.94	23.83	1.09	27.79	1.25	31.75	1.41	35.71	–	–
16	16.000	406.40	0.165	4.19	0.188[B]	4.78[B]	–	–	–	–	1.03	26.19	1.22	30.96	1.44	36.53	1.59	40.49	–	–
18	18.000	457.20	0.165	4.19	0.188[B]	4.78[B]	–	–	–	–	1.16	29.36	1.38	34.93	1.56	39.67	1.78	45.24	–	–
20	20.000	508.00	0.188	4.78	0.218[B]	5.54[B]	–	–	–	–	1.28	32.54	1.50	38.10	1.75	44.45	1.97	50.01	–	–
22	22.000	558.80	0.188	4.78	0.218[B]	5.54[B]	–	–	–	–	1.38	34.93	1.63	41.28	1.88	47.63	2.13	53.98	–	–
24	24.000	609.60	0.218	5.54	0.250	6.35	–	–	–	–	1.53	38.89	1.81	46.02	2.06	52.37	2.34	59.54	–	–
30	30.000	762.00	0.250	6.35	0.312	7.92	–	–	–	–	–	–	–	–	–	–	–	–	–	–

A. Schedules 5S and 10S wall thicknesses do not permit threading in accordance with the American National Standard for Pipe Threads (ANSI B1.20.1).
B. These do not conform to the American National Standard for Welded and Seamless Wrought Steel Pipe(ANSI B36.10–1979).

气动球阀系列
Pneumatic Ball Valve Series

产品用途及结构特点

气动球阀广泛适用于天然气、油品、化工、冶金、造纸、电力、矿业、印染、生物制药、日用化工、食品饮料、水处理及空气处理等行业的流体自动控制或调节控制，与自动化气动仪表配套使用。

气动球阀结构特点为：

- 气动执行器：采用新型AT系列气动执行器，其结构获得国家实用新型专利，有双作用式和单作用式(弹簧复位)，采用齿轮齿条式结构传动，性能更安全可靠；大口径阀门采用AW系列气动执行器，采用拨叉式结构传动，结构合理，输出扭矩大，有双作用式和单作用式(弹簧复位)；详细参数请参考本公司AT系列及AW系列气动执行器样本。
- 壳体结构：球阀的阀体根据使用需要及实际工况条件的不同可设计为铸造结构、锻造结构及全焊接结构三种形式，其中全焊接结构的球阀主要适用于埋地使用。
- 独特的阀座密封结构：

浮动式球阀采用唇型弹性密封圈结构设计，其结构获得国家实用新型专利，更能保证密封的可靠性及使用寿命，对于低压、超低压或真空工况用球阀，采用板簧加截的阀座密封结构，能确保球阀长期使用的可靠密封。中、高温球阀的阀座材料可选用对位聚苯或金属材料。

固定式球阀根据压力的大小、介质性质及密封要求的不同而选择球前密封结构、球密封结构或前后双密封结构。中、高温球阀的阀座材料可选用对位聚苯或金属材料。

- 阻塞与排泄：当阀门处于关闭状态时，上下流侧的阀座使液体阻断，阀体中腔的积滞物可以通过排泄装置进行排泄。
- 自动泄压结构：当中腔压力出现异常升高现象时，中腔介质能依靠本身的推力推动阀座而自动泄压，从而确保阀体的安全。
- 阀杆的可靠密封：阀杆采用有倒密封的下装式结构，倒密封的密封力随介质压力的增高而增大，故能确保阀杆的可靠密封，而且，当阀门异常升压时，阀杆不会喷出。
- 防火结构：根据工况及用户的需要，球阀可设计为防火结构。球阀的耐火设计执行API 6D及JB/T6899等标准的规定，一旦发生火灾而使软密封圈烧损时，球阀的防火结构可阻止介质的大量泄漏，防止火灾的进一步扩大。
- 防静电结构：当操作阀门时，由于球体和阀座之间的磨擦，会产生静电电荷并积聚在球体上，为防止产生静电火花，特在阀门上设置防静电导出装置，将积聚在球体上的电荷导出。
- 全通径结构及缩径结构：为满足用户的不同需要，诚真流体公司球阀产品有全通径及缩径两种系列。全通径球阀的通道内径与管道内径一致，便于管理清扫，而缩径系列球阀的重量相对较轻，但流体阻力仅为相同口径截止阀的1/7左右，故缩径系列球阀的应用前景较为广泛。

产品性能规范

压力等级		公称压力PN(MPa)					磅级(Class)			
		1.6	2.5	4.0	6.4	10.0	150	300	400	600
试验压力(MPa)	壳体试验	2.4	3.75	6.0	9.6	15.0	3.03	7.5	10.2	15.0
	密封试验	1.76	2.75	4.4	7.04	11.0	2.2	5.5	7.48	11.0
	气密封试验	0.6(MPa)								
适用介质		阀体材质								
		C			P			R		
		水、蒸汽、油品、液化气等			硝酸类腐蚀性介质等			醋酸类腐蚀性介质等		
特殊介质		含有硫化氢的天然气介质；用于钢铁及有色金属冶炼的煤粉、铝粉输送系统；用于造纸行业的纸浆输送及其它含有颗粒、短纤维的介质等。								

Uses and Structural Features of Product

Penumatic ball valve series are widely used in natural gas, oil, chemical industry, metallurgy, papermaking, power, mining, printing and dying, biological pharmacy, daily chemicals, foodstuff and beverage, water treatment and air treatment etc. For the automatic or adjustment control of fluid, together with automatic pneumatic meters.

The Structural Features of Pneumatic Ball Valves Series:

Pneumatic Actuator uses new-style AT pneumatic actuator, provided with both double-acting and single-acting types(spring reposition), driven by gear and rack wtth high dependabirty; big diameter valves are driven by AW pneumatic actuator on pull-extraction manner, with reasionable sturcture and large output torque as well as both double-*acting and single-acting types(spring reposition). Refer to our stylebook of pneumatic actuator for more details information.

- Shell Sturcture: As per useres' requirements and real working conditions, fixed ball valves can be designed to three structures including cast, forged and full-welded, and valves of full-*welded sturcture are mainly applicable for buried use.

Unique Sealing Sturcture of Valve Base Floating ball valve adopts the sturcture of lip-type elastic sealing ring to insure the sealing dependability. For ball valves used in low-tension, ultra-low-tension or vacuum conditions, the valve-base sealing structure with leaf spring loading is adopted to maintain long-time reliable sesling. The valve-base of high-or medium-temperature ball valve may usepara-position polyphenylene of metal material.

According to the difference in pressure, medium character and sealing requirements, fixed ball valve may choose structures of front-ball sealing, back-ball sealing or front-back double sealing. The valve base of high-oor medium-temperature ball valve may use pare-position polyphenylene or metal material.

- Obsturction and Drainage: When valve is io off-position, the valve bases at upper and lower stream will interdict the fluid, and the deposit in the cavity may be discharged by drainage device.

Automatic Pressure-relieving Sturcture: In case of abnormal rise of pressure occurred in cloaca cavity, the mediums in it may drive the valve base with its self-thrust to realize automatic pressure relief, thus to ensure the safety of valve body.

- Reliable Sealing of Stem: Valve stem adopts the downward installation sturcture with back sesling. The sealing power increases along with the rise of medium pressure, thus to ensure reliable sealing of valve stem. In addition, stem will not burst forth in case of abnormal pressure rise.
- Fireproof Sturcture: Fireproof sturcture may be adopted for ball valve as per working conditions and users' requirements. The fireproof design conforms to API 6D and JB/T 6899 standards etc. In case of soft sealing ring being damaged in fire, the fireproof structure can stop the large leakage of medium, thus to avoid further expansion of fire.
- Anti-static Strusture: When operating, the friction between sphere and base may cause static charge accumulated on the sphere. To avoid static spark, static device is provided on the valve to educt the electric charge on the sphere.
- Full Bore Structure and Reduced Bore Structure: These two serices are offered to meet users' different requirements. The passage inside diameter of full bore ball valve is the same as that of pipe, making it convenient for control and cleaning, The weight of reduced bore ball valve is relativey smaller, but the fluid resistance is only arund 1/7 of that of stop valve with the same caliber. Therefore, the application prospect is much better for the latter.

Products Performance Specifucation

Pressure grade		Nominal Pressure PN(MPa)					Pound(Class)			
		1.6	2.5	4.0	6.4	10.0	150	300	400	600
Test Pressure (MPa)	Shell test	2.4	3.75	6.0	9.6	15.0	3.03	7.5	10.2	15.0
	Sealing test	1.76	2.75	4.4	7.04	11.0	2.2	5.5	7.48	11.0
	Air Sealing test	0.6(MPa)								
Applicable medium		Material of Valve Body								
		C			P			R		
		Water, steam, oil and liquefied gas etc.			Corrosive mediums such as nitric acid etc.			Corrosive mediums such as nitric acid etc.		
Special Medium		Natural gas containing sulphureted hydrogen; transportation system for coal powder or aluminum powder used for the smelting of steel and non-ferrous metal; mediums used for the transportation of paper pulp in papermaking industry as well as other mediums containing granules or staple fiber etc.								

阀座密封材料温度额定值 Seat Seal Material Temperature Rating

代号 Code	材料 Material	适用温度 Suitable temperature(℃)
F	增强聚四氟乙烯 Reinforced polytetrafluoroethylene	-40~180
P	对位聚苯 Para polystyrene	-40~300
N	尼龙 Nylon	-20~80
Y	硬质合金 Carbide	-40~425

附件的选项 Options for attachments

根据不同控制和要求可选择下列附件：

切断型附件：单电控电磁阀、双电控制电磁阀、限位开关回讯器。

调节型附件：电气定位器、气动定位器、电气转换器。

气源处理附件：空气过滤减压阀、气源处理三联件。

手动机构：Mini MOD系列

The following accessories can be selected according to different controls and requirements:

Cut-off accessories: single electric control solenoid valve, double electric control solenoid valve, limit switch feedback device.

Adjustable accessories: electrical positioner, pneumatic positioner, electrical converter.

Air source treatment accessories: air filter pressure reducing valve, air source treatment triplet.

Manual mechanism: Mini MOD series

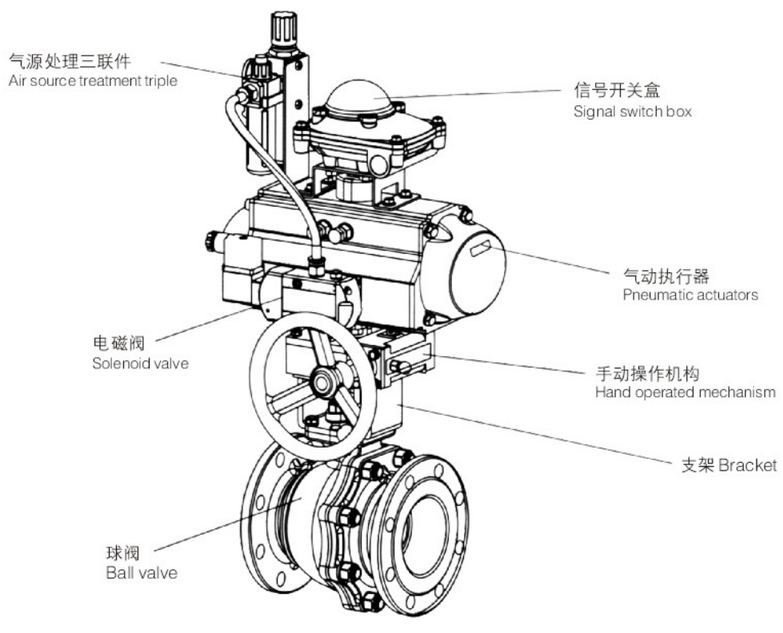

技术规范 Technique norm

设计依据 Design Basis	API、ANSI标准 Standard
设计标准 Design Standard	API 6D、ANSI B16.34
结构长度 Face to face dimension / 法兰连接 Flange Connecting	API 6D、ANSI B16.10
连接法兰尺寸 Connecting Flange Size	ANSI B16.5
试验和检验 Test & inspection	API 6D、API 598

注：球阀结构长度及连接法兰尺寸可根据用户要求设计制造。

Note: The structural length and connecting flange size of ball valve series can be designed and manufactured as per users' requirements.

主要零件材质表 Form of Main Parts Materials

序号 No.	零件名称 Name of parts	材质 Material		
		C	P	R
1	右阀体 Right valve	A216-WCB	A351-CF8	A351-CF8M
2	螺母 Nut	A194-2H	A276-304	A276-316
3	垫片 Gasket	PTFE、石墨金属复合垫 Graphite metal composite pad		
4	螺栓 Screw	A193-B7	A276-304	A276-316
5	阀体 Body	A216-WCB	A351-CF8	A351-CF8M
6	阀座 Seat	PTFE、尼龙(Nylon)、对位聚苯(PPL) 硬质合金Hard Alloy		
7	球体 Ball	A182-F304	A182-F304	A182-F316
8	阀杆 Stem	A276-410	A276-304	A276-316
9	垫片 Gasket	A276-304	A276-304	A276-316
10	填料 Packing	PTFE、柔性石墨 Flexible Graphite		
11	衬套 Bushing	PTFE复合轴承 Composite bearings		
12	压盖 Gland	A216-WCB	A351-CF8	A351-CF8M
13	螺栓 Screw	A194-2H	A276-304	A276-304
14	螺栓 Screw	A194-2H	A276-304	A276-304
15	连接支架 Connecting Yoke	A351-CF8	A351-CF8	A351-CF8
16	螺栓 Screw	A194-2H	A276-304	A276-304
17	连接套 Connecting Set	A351-CF8	A351-CF8	A351-CF8
18	气动装置 Pneumatic Device	GT系列、AT系列、AW系列 GT Series, AT Series, AW Series		
19	位置指示器 Location Indicator	塑料 Plastic		

注：球阀主要零部件及密封圈的材质可根据实际工况条件或用户特殊要求设计选用。

Note: The structural length and connecting flage size of ball valve series can be designed and manufactured as per uses' raquirements.

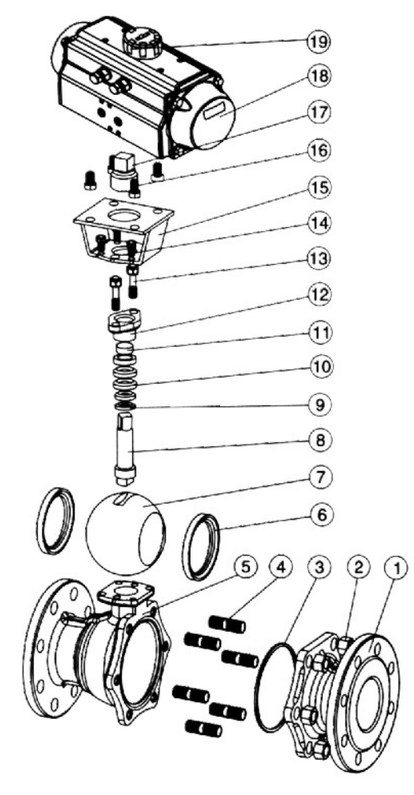

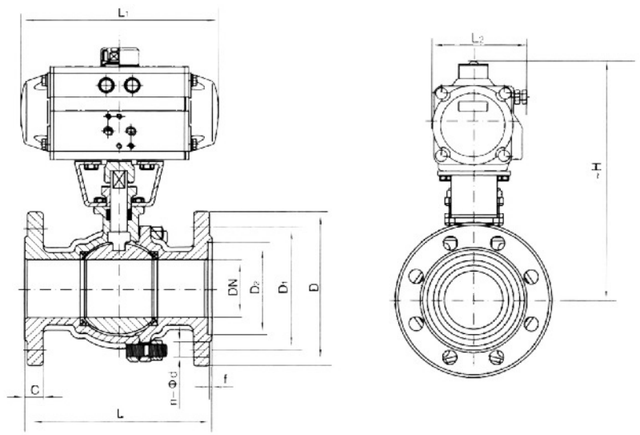

主要外形及连接法兰尺寸 Main Outline and Connecting Flange Size Q641F(N、P、H、Y) Class 150

公称通径 Nominal diameter		外形尺寸 Outline Size				连接法兰尺寸 Connecting Flange Size						执行器型号 Actuator Model
mm	in	L	L1	L2	~H	D	D1	D2	C	f	n-Φd	
15	1/2	108	141/159	71/83	204/235	89	60.5	35	10	1.6	4-Φ15	AT050D/AT063S
20	3/4	117	141/159	71/83	209/240	99	69.9	43	10.5	1.6	4-Φ15	AT050D/AT063S
25	1	127	159/211	83/95	214/256	108	79.2	51	11.5	1.6	4-Φ15	AT063D/AT075S
32	1 1/4	140	211/248	95/107	257/277	117	88.9	64	13	1.6	4-Φ15	AT075D/AT088S
40	1 1/2	165	248/269	107/123	274/292	127	98.6	73	14.5	1.6	4-Φ15	AT088D/AT100S
50	2	178	248/269	107/123	290/300	152	120.7	92	16	1.6	4-019	AT088D/AT100S
65	2 1/2	190	269/345	123/152	310/335	178	139.7	105	18	1.6	4-Φ19	AT100D/AT125S
80	3	203	269/345	123/152	346/368	191	152.47	127	19.5	1.6	4-Φ19	AT100D/AT125S
100	4	229	345/409	152/172	378/410	229	190.5	157	24	1.6	8-Φ19	AT125D/AT145S
125	5	356	409/438	172/187	425/450	254	215.9	186	24	1.6	8-Φ22	AT145D/AT160S
150	6	394	550/600	215/240	468/531	279	241.3	216	25.5	1.6	8-Φ22	AT190D/AT210S
200	8	457	633/730	262/330	583/618	343	298.5	270	28.5	1.6	8-Φ22	AT240D/AT240S

注：球阀结构长度及连接法兰尺寸可根据用户要求设计制造。
执行器型号XXX/XXX分别是气动执行器双作用式，单作用式(弹簧复位)。
根据不同阀门扭矩、使用介质适配的执行器型号可能有所不同，相关尺寸随之变化。
以上执行器配置及数据均采用软密封(F、N、P)阀门，硬密封阀门的配置及数据请咨询本公司。

Note: The strrctural length and connecting flange size of ball valve series can be designed and manufactured as per users'requirements
Data XXX/XXX represent respectively the double-acting/single-acting type(spring reposition)of pneumatic actuator
The relative sizes are subject to change responding to the difference in valva torque, medium and actuator model
The above actuator configuration and data all use soft-sealed valves (F, N, P) and hard-saaled valves, or consulting us if you have more questions.

主要外形及连接法兰尺寸 Main Outline and Connecting Flange Size Q641F(N、P、H、Y) Class 300

公称通径 Nominal diameter		外形尺寸 Outline Size				连接法兰尺寸 Connecting Flange Size						执行器型号 Actuator Model
mm	in	L	L1	L2	~H	D	D1	D2	C	f	n-Φd	
15	1/2	140	141/159	71/83	204/235	95	65.7	35	14.5	1.6	4-Φ16	AT050D/AT063S
20	3/4	152	141/159	71/83	209/240	117	82.5	43	15.8	1.6	4-Φ19	AT050D/AT063S
25	1	165	211/248	95/107	214/265	124	88.9	51	17.6	1.6	4-Φ19	AT075D/AT088S
32	1 1/4	178	211/248	95/107	269/287	133	98.4	64	19.1	1.6	4-Φ19	AT075D/AT088S
40	1 1/2	190	248/269	107/123	282/292	155	114.3	73	20.6	1.6	4-Φ19	AT088D/AT100S
50	2	216	269/315	123/141	290/325	165	127	92	22.3	1.6	8-Φ19	AT100D/AT115S
65	2 1/2	241	269/345	123/152	310/357	191	149.2	105	25.4	1.6	8-Φ22	AT100D/AT125S
80	3	283	345/409	152/172	346/368	210	168.3	127	28.6	1.6	8-Φ22	AT125D/AT145S
100	4	305	409/438	172/187	418/443	254	200	157	31.8	1.6	8-Φ26	AT145D/AT160S
125	5	381	438/550	187/215	460/503	279	234.9	186	35	1.6	8-Φ26	AT160D/AT190S
150	6	403	550/600	240/262	518/563	318	269.9	216	36.6	1.6	12-Φ26	AT210D/AT240S
200	8	502	633/730	262/330	583/618	381	330.2	270	41.3	1.6	12-Φ29	AT240D/AT270S

主要外形及连接法兰尺寸 Main Outline and Connecting Flange Size Q641F(N、P、H、Y) Class 300

公称通径 Nominal diameter		外形尺寸 Outline Size				连接法兰尺寸 Connecting Flange Size						执行器型号 Actuator Model
mm	in	L	L1	L2	~H	D	D1	D2	C	f	n-Φd	
15	1/2	165	141/211	71/95	204/235	95	65.7	35	14.5	6.4	4-Φ16	AT050D/AT075S
20	3/4	190	159/211	83/95	240/252	117	82.5	43	15.8	6.4	4-Φ19	AT063D/AT075S
25	1	216	211/248	95/107	257/265	124	88.9	51	17.6	6.4	4-Φ19	AT075D/AT088S
32	1 1/4	229	248/269	107/123	269/287	133	98.4	64	20.6	6.4	4-Φ19	AT088D/AT100S
40	1 1/2	241	248/315	107/141	282/292	156	114.3	73	22.3	6.4	4-Φ19	AT088D/AT115S
50	2	292	269/345	123/152	300/325	165	127	92	25.4	6.4	8-Φ19	AT100D/AT125S
65	2 1/2	330	345/438	152/187	335/357	190	149.2	105	28.6	6.4	8-Φ22	AT125D/AT160S
80	3	356	409/438	172/187	368/400	210	168.3	127	31.8	6.4	8-Φ22	AT145D/AT160S
100	4	406	438/550	187/215	418/506	254	200	157	35	6.4	8-Φ26	AT160D/AT190S
125	5	457	550/633	215/262	445/548	279	234.9	186	38.2	6.4	8-Φ26	AT190D/AT240S
150	6	495	633/730	262/300	563/598	318	269.9	216	41.3	6.4	12-Φ26	AT240D/AT270S
200	8	597	730	330	636/666	381	330.2	270	47.6	6.4	12-Φ29	AT270S

注：球阀结构长度及连接法兰尺寸可根据用户要求设计制造。
执行器型号XXX/XXX分别是气动执行器双作用式，单作用式(弹簧复位)。
根据不同阀门扭矩、使用介质适配的执行器型号可能有所不同，相关尺寸随之变化。
以上执行器配置及数据均采用软密封(F、N、P)阀门，硬密封阀门的配置及数据请咨询本公司。

Note: The strrctural length and connecting flange size of ball valve series can be designed and manufactured as per users'requirements
Data XXX/XXX represent respectively the double-acting/single-acting type(spring reposition)of pneumatic actuator
The relative sizes are subject to change responding to the difference in valva torque, medium and actuator model
The above actuator configuration and data all use soft-sealed valves (F, N, P) and hard-saaled valves, or consulting us if you have more questions.

技术规范 Technique norm

设计依据 Design Basis		API, ANSI标准 Standard
设计标准 Design Standard		API 6D, ANSI B16.34
结构长度 Face to face dimension	法兰连接 Flange Connecting	API 6D, ANSI B16.10
连接法兰尺寸 Connecting Flange Size		ANSI B16.5
试验和检验 Test & inspection		API 6D, API 598

注：球阀结构长度及连接法兰尺寸可根据用户要求设计制造。
Note: The structural length and connecting flange size of ball valve series can be designed and manufactured as per users' requirements.

主要零件材质表 Form of Main Parts Materials

序号 No.	零件名称 Name of parts	材质 Material C	P	R
1	左右阀体 Body	A216-WCB	A351-CF8	A351-CF8M
2	螺栓 Screw	A193-B7	A276-304	A276-316
3	螺母 Nut	A194-2H	A276-304	A276-316
4	弹簧 Spring	YB/T5104 60Si2Mo	YBD(T)11 1Cr18Ni9	YBD(T)11 1Cr18Ni9
5	阀座 Sea	A182-A105	A276-304	A276-316
6	密封圈 Sealing ring	PTFE、尼龙(Nylon)、对位聚苯(PPL)、硬质合金 Hard Alloy		
7	O形圈 "O" Ring	橡胶Rubber、氟橡胶Viton		
8	垫片 Gasket	PTFE、石墨金属复合垫 Graphite metal composite pad		
9	法兰 Flange	A216-WCB	A351-CF8	A351-CF8
10	垫片 Gasket	A276-304	A276-304	A276-316
11	下阀杆 Stem	A276-410	A276-304	A276-316
12	衬套 Bushing	PTFE复合轴承 Composite bearings		
13	球体 Ball	A182-F304	A182-F304	A182-F316
14	键 Key	AISI C1045	A276-304	A276-316
15	阀杆 Stem	A276-410	A276-304	A276-316
16	衬套 Bushing	PTFE复合轴承 Composite bearings		
17	填料 Packing	PTFE、柔性石墨 Flexible Graphite		
18	填表料压盖 Gland	A216-WCB	A276-304	A276-316
19	连接套 Connecton set	A182-A105	A276-304	A276-304
20	支架 Yoke	A216-WCB	A276-304	A276-304
21	阀体 Body	A216-WCB	A351-CF8	A351-CF8
22	气动装置 Pneumatic Device	GT系列、AT系列、AW系列 GT Series, AT Series, AW Series		

注：球阀主要零部件及密封圈的材质可根据实际工况条件或用户特殊要求设计选用。
Note: The main spare parts and sealing-ring materials of ball valve series can be designed for options as per real working conditions and users'special requirements.

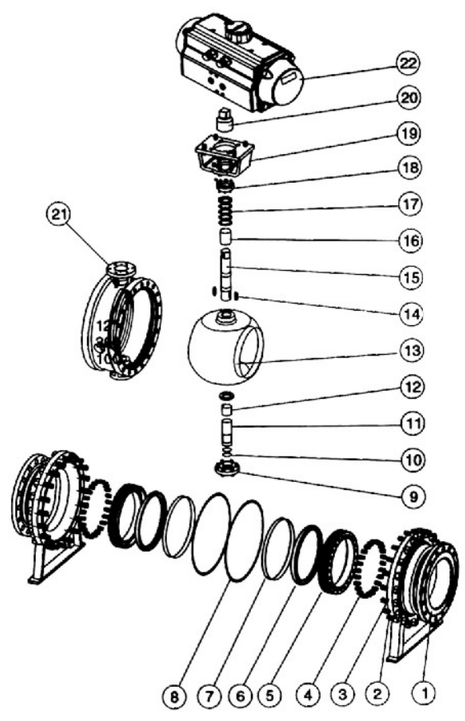

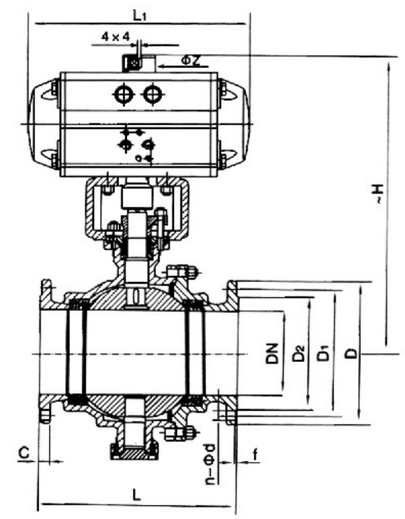

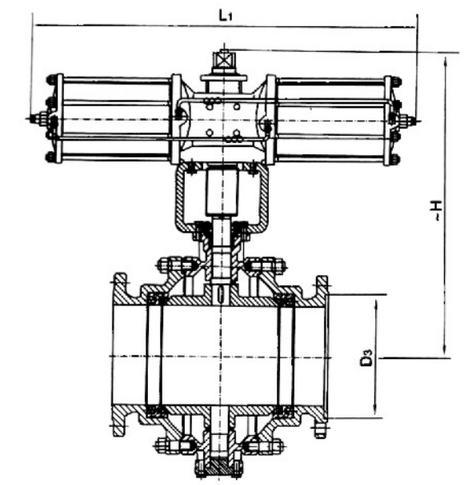

主要外形及连接法兰尺寸 Q647F(N、P、H、Y)-Class 150 Main Outline and Connecting Flange Size

公称通径 Nominal diameter DN	in	外形尺寸 Outline Size L	L1	~H	连接法兰尺寸 Connecting Flange Size D	D1	D2	C	f	n-Φd	执行器型号 Actuator Model
50	2	178	248/269	320/345	152	120.6	92	15.8	1.6	4-Φ19	AT088D/AT100S
65	2 1/2	190	248/269	365/390	178	139.7	105	17.6	1.6	4-Φ19	AT088D/AT100S
80	3	203	269/345	403/425	190	152.4	127	19.1	1.6	4-Φ19	AT100D/AT125S
100	4	229	345/438	475/532	229	190.5	157	23.9	1.6	8-Φ19	AT125D/AT160S
125	5	356	409/550	539/627	254	216	186	23.9	1.6	8-Φ22	AT145D/AT190S
150	6	394	438/600	574/652	279	241.3	216	25.4	1.6	8-Φ22	AT160D/AT210S
200	8	457	600/633	693/728	343	298.5	270	28.6	1.6	8-Φ22	AT210D/AT240S
250	10	533	633/730	762/792	406	362	324	30.2	1.6	12-Φ25	AT240D/AT270S
300	12	610	1180	820	483	432	381	31.8	1.6	12-025	AW20/AW25S
350	14	686	1180	923	533	476	413	35	1.6	12-Φ29	AW20/AW28S
400	16	762	1320	979	597	539.5	470	36.6	1.6	16-Φ29	AW28/AW35S
500	20	914	1430	1079	699	635	584	42.9	1.6	20-Φ32	AW35/AW40S

注：球阀结构长度及连接法兰尺寸可根据JB/T79标准或用户要求设计制造。
执行器型号XXX/XXX分别是气动执行器双作用式/单作用式（弹簧复位）。
根据不同阀门扭矩、使用介质适配的执行器型号可能有所不同，相关尺寸随之变化。
以上执行器配置及数据均采用软密封(F、N、P)阀门，硬密封阀门的配置及数据请咨询本公司。
Note: The strrctural length and connecting flange size of ball valve series can be designed and manufactured as per JB/T79 standard or users'requirements.
Data XXX/XXX represent respectively the double-acting/single-acting type(spring reposition)of pneumatic actuator.
*The relative sizes are subject to change responding to the difference in valva torque, medium and actuator model.
The above actuator configuration and data all use soft-sealed valves (F, N, P) and hard-saaled valves, or consulting us if you have more questions.

主要外形及连接法兰尺寸 Q647F(N、P、H、Y)-Class 300 Main Outline and Connecting Flange Size

公称通径 Nominal diameter		外形尺寸 Outline Size			连接法兰尺寸 Connecting Flange Size						执行器型号 Actuator Model
DN	in	L	L1	~H	D	D1	D2	C	f	n-Φd	
50	2	216	248/345	336/373	165	127	92	22.3	1.6	8-Φ19	AT088D/AT125S
65	2 1/2	241	269/409	395/449	190	149.2	105	25.4	1.6	8-Φ22	AT100D/AT145S
80	3	283	315/438	435/477	210	168.3	127	28.6	1.6	8-Φ22	AT115D/AT160S
100	4	305	409/550	504/572	254	200	157	31.8	1.6	8-Φ22	AT145D/AT190S
125	5	381	438/600	566/634	279	234.9	186	35	1.6	8-Φ22	AT160D/AT210S
150	6	403	550/633	649/709	318	269.9	216	36.6	1.6	12-Φ22	AT190D/AT240S
200	8	502	600/633	715/750	381	330.2	270	41.3	1.6	12-Φ25	AT210D/AT240S
250	10	568	633/730	782/812	444	387.5	324	47.7	1.6	16-Φ29	AT240D/AT270S
300	12	648	1162	839	521	451	381	50.8	1.6	12-Φ32	AW20/AW25S
350	14	762	1380	984	584	514.5	413	54	1.6	20-Φ32	AW20/AW28S
400	16	838	1860	1004	648	571.5	470	57	1.6	20-Φ35	AW28/AW35S
500	20	991	1860	1118	775	686	584	63.5	1.6	24-Φ35	AW35/AW40S

主要外形及连接法兰尺寸 Q647F(N、P、H、Y)-Class 400 Main Outline and Connecting Flange Size

公称通径 Nominal diameter		外形尺寸 Outline Size			连接法兰尺寸 Connecting Flange Size						执行器型号 Actuator Model
DN	in	L	L1	~H	D	D1	D2	C	f	n-Φd	
50	2	292	269/409	393/447	165	127	92	25.4	6.4	8-Φ19	AT100D/AT145S
65	2 1/2	330	345/438	432/474	190	149.5	105	28.6	6.4	8-Φ22	AT125D/AT160S
80	3	356	345/409	507/575	210	168.3	127	31.8	6.4	8-Φ22	AT125D/AT145S
100	4	406	409/550	572/640	254	200	157	35	6.4	8-Φ26	AT145D/AT190S
125	5	457	438/600	644/704	279	234.9	186	38.2	6.4	8-Φ26	AT160D/AT210S
150	6	495	550/633	721/751	318	269.9	216	41.3	6.4	12-Φ26	AT190D/AT240S
200	8	597	633/730	787/817	381	330.2	270	47.6	6.4	12-Φ29	AT240D/AT270S
250	10	673	1180	801	444	387.3	324	54	6.4	16-Φ32	AT270D/AW25S
300	12	762	1180	916	521	450.8	381	57.5	6.4	16-Φ35	AW25/AW28S
350	14	826	1320	973	584	514.3	413	60.5	6.4	20-Φ35	AW25/AW35S
400	16	902	1430	1055	648	571.5	470	63.5	6.4	20-Φ39	AW35/AW40S
500	20	1054	1950	1228	775	685.8	584	70	6.4	24-Φ42	AW40S

注：球阀结构长度及连接法兰尺寸可根据JB/T79标准或用户要求设计制造。
执行器型号XXX/XXX分别是气动执行器双作用式/单作用式（弹簧复位）。
根据不同阀门扭矩、使用介质适配的执行器型号可能有所不同，相关尺寸随之变化。
以上执行器配置及数据均采用软密封(F、N、P)阀门，硬密封阀门的配置及数据请咨询本公司。

Note: The strrctural length and connecting flange size of ball valve series can be designed and manufactured as per JB/T79 standard or users'requirements.
Data XXX/XXX represent respectively the double-acting/single-acting type(spring reposition)of pneumatic actuator.
*The relative sizes are subject to change responding to the difference in valva torque, medium and actuator model.
The above actuator configuration and data all use soft-sealed valves (F, N, P) and hard-saaled valves, or consulting us if you have more questions.


内螺纹连接
Inside thread connection


对焊连接
Welding connection


卡箍连接
Hoop connection


外螺纹连接
Outside thread connection

技术规范 Technique norm

设计依据 Design Basis	GB标准 Standard	ANSI标准 Standard
设计标准 Design standsrd	GB/12237	ANSI B16.34
试验和检验 Test & Inspection	JB/T9092	API 598

注：系列球阀结构长度及连接法兰尺寸可根据用户要求设计制造。
Note: The structural length and connecting flange size of ball valve series can be designed and manufactured as per users' requirements.

主要零件材质表 Form of Main Parts Materials

序号 No.	零件名称 Name of parts	材质 Material
1	螺栓 Screw	不锈钢304 Stainless Steel 304
2	接头 Connector	不锈钢CF8、CF8M、CF3、CF3M Stainless Steel CF8、CF8M、CF3、CF3M
3	阀座 Seat	PTFE、尼龙(Nylon)、对位聚苯(PPL)、硬质合金(H/Y)
4	球体 Ball	不锈钢304、304L、316、316L Stainless Steel 304、304L、316、316L
5	阀体 Body	不锈钢CF8、CF8M、CF3、CF3M Stainless Steel CF8、CF8M、CF3、CF3M
6	螺母 Nut	不锈钢304 Stainless Steel 304
7	阀杆 Stem	不锈钢304、304L、316、316L Stainless Steel 304、304L、316、316L
8	垫片 Gasket	不锈钢304、316 Stainless Steel 304、316
9	填料 Packing	PTFE
10	压盖 Gland	不锈钢304、304L、316、316L Stainless Steel 304、304L、316、316L
11	连接支架 Connecting Yoke	不锈钢CF8 Stainless Steel CF8
12	连接套 Connecting Set	不锈钢304 Stainless Steel 304
13	螺栓 Screw	不锈钢304 Stainless Steel 304
14	气动装置 Pneumatic Device	AT系列 AT Series
15	位置指示器 Location Indicator	塑料 Plastic

注：系列球阀主要零部件及密封圈的材质可根据实际工况条件或用户特殊要求设计选用。
Note: The main spare parts and sealing-ring materials of ball valve series can be designed for options as per real working conditions and users' special requirements.

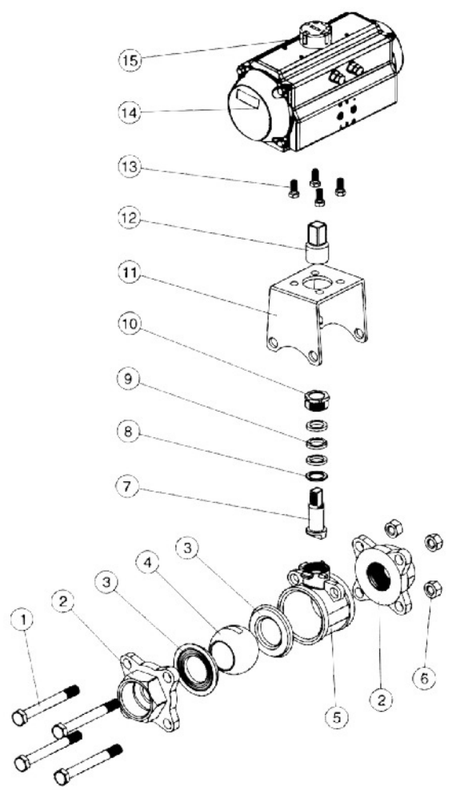

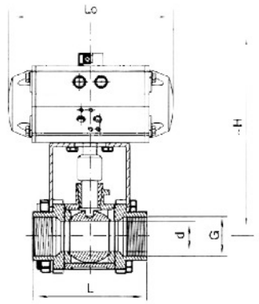

Q611

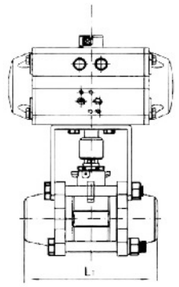

Q681

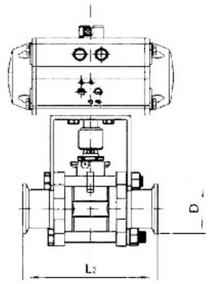

Q661

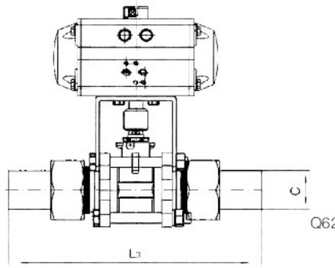

Q621

主要外形及连接法兰尺寸 Q61(6、8、2)1F(N、P、H、Y)-PN16~64(1.6~6.4MPa)/PN25(2.5MPa) Main Outline and Connecting Flange Size

公称通径 Nominal diameter		连接尺寸 Connecting Size										执行器型号 Actuator Model
DN	in	d	L	G	L_1	L_2	D	L_3	C	Lo	~H	
15	1/2	15	72	1/2"	70	100	34	170	21	141/159	159/175	AT050D/AT063S
20	3/4	20	82	3/4"	85	110	50.5	185	26	141/159	167/183	AT050D/AT063S
25	1	25	90	1"	95	120	50.5	200	31	141/211	172/215	AT050D/AT075S
32	1 1/4	32	112	1 1/4"	110	131	50.5	225	38	159/211	210/230	AT063D/AT075S
40	1 1/2	40	120	1 1/2"	201/209	98/108	50.5	260	46	211/248	218/248	AT075D/AT088S
50	2	50	145	2"	209/242	108/120	65	300	60	211/269	248/283	AT075D/AT100S
65	2 1/2	65	185	2 1/2"	242/275	120/132	77.5			248/315	273/320	AT088D/AT115S
80	3	80	210	3"	275/332	132/148	91			269/345	313/335	AT100D/AT125S

注：系列球阀结构长度及连接法兰尺寸可根据JB/T79标准或用户要求设计制造。
数据XXX/XXX分别是气动执行器双作用式/单作用式(弹簧复位)。
根据不同阀门扭矩、使用介质适配的执行器型号可能有所不同，相关尺寸随之变化。
以上执行器配置及数据均采用软密封(F、N、P)阀门，硬密封阀门的配置及数据请咨询本公司。

Note: The strrctural length and connecting flange size of ball valve series can be designed and manufactured as per JB/T79 standard or users' requirements.
Data XXX/XXX represent respectively the double-acting/single-acting type(spring reposition)of pneumatic actuator.
The relative sizes are subject to change responding to the difference in valve torque, medium and actuator model.
The above actuator configuration and data all use soft-sealed valves(F, N, P) and hard-sealed valves, or consulting us if you have more questions.

气动蝶阀系列
Pneumatic Butterfly Valve Series

产品用途及结构特点 Uses and structural features of product

系列气动蝶阀广泛用于天然气、油品、化工、冶金、造纸、电办、矿业，印染、生物制药，日用化工，食品饮料，水处理及空气处理等行业的流体自动控制或调节控制。与自动化气动仪表配套使用。

系列气动蝶阀结构特点为：

- 气动执行器：采用新型AT系列气动执行器，有双作用式和单作用式(弹簧复位)，采用齿轮齿条式结构传动，性能更安全可靠；大口径阀门采用AW系列气动执行器，采用拔叉式结构传动，结构合理，输出扭矩大，有双作用式和单作用式(弹簧复位)；详细参数请参考本公司AT系列及AW系列气动执行器样本。
- 中线弹性密封：密封材料分橡胶和氟塑料或全衬橡胶和氟塑料，弹性阀座配高精度蝶板确保零泄漏，阀杆底、中、上部配有衬套，用于支撑和旋转滑动，保特最小磨擦力。产品重量轻，体积小，启闭迅速。
- 三偏心结构密封：阀座密封材料分金属密封和氟塑料密封。金属密封蝶阀有弹性密封圈阀座与多层复合蝶板。三维偏心密封结构启闭磨擦小，密封性能可靠，抗磨损耐高温，具有自定心作用，泄漏最小，使用寿命长。产品结构合理重量轻，体积小，安装尺寸小，操作简便，启闭迅速，是目前发展最快适用最广泛的流体控制阀门。

Pneumatic butterfly valves are widely used in natural gas, oil chemical industry, metallurgy, papermaking, power, mining, print ing and dying, biological pharmacy, daily chemicals, foodstuff and beverage, water treatment and air treatment etc. For automatic control and adjus-tment control of fluid, together with automatic pneumatic meters.

The Structural Features of Pneumatic Butterfly Valves:

- Pneumatic Actuator uses new-style AT pneumatic actuator, with double-acting and single-acting types(spring reposition), driven by gear and rack with high drpendabllity; big diameter valves are driven by AW pneumatic actuator on pull-extraction manner, with reasonable stucture and large output torque as well as double-acting and single-acting types(spring reposition). Refer to our stylebook of pneumatic actuator.
- Center-line Resilient Seal: uses rubber and fluoroplastic of full-lining rubber and fluoroplastic as sealing material. Elastic Seat is furni-shed with high -precision butterfly plate to insure zero leakage. Bushings are mounted on the bottom, middle and upper parts of valve stem for supporting and rotary slippage, thus to retain minimum friction. The products are light-weighted, small-sized and quick to start and close.
- Three-eccentricity Structure Seal: using metal and fluoroplastic for seat sealing. Metal sealed butterfly valves incorp orate seat with elastic sealing ring and multilayer composite butterfly plate. 3-D eccentric sealing structure functions small friction upon starting and closing, dependable sealing, anti-friction, high-temperature resistance, self-centering effect, little leakage and ling life-span. Provided with the ad-vantages of reasonable structure, lightweight, small sie, dapper installation dmension, easy operat-ion and quick on-and-off, the fluid control valves have been rapidly developed and most widely used.

产品性能规范 Products performance specifucation

压力等级 Pressure level		公称压力PN(MPa) Nominal Pressure PN(MPa)							磅级(Class) Pound(Class)			
		0.6	1.0	1.6	2.5	4.0	6.4	10.0	150	300	400	600
试验压力 (MPa) Test Pressure	壳体试验 Shell test	0.9	1.5	2.4	3.75	6.0	9.6	15.0	3.03	7.5	10.2	15.0
	密封试验 Sealing test	0.66	1.1	1.76	2.75	4.4	7.04	11.0	2.2	5.5	7.48	11.0
	气密封 Gas seal	0.6(MPa)										
适用介质 Appilcable medium		阀体材质 Body Material										
		C				P			R			
		水、蒸气、油品、液化气等 Water, vapor, oil and liquefied gas etc.				硝酸类腐蚀性介质等 Corrosive mediums such as nitric acid etc.			醋酸类腐蚀性介质等 Corrosive mediums such as acetic acid etc.			

阀座密封材料温度额定值 Temperature Rating of Seat Sealing Material

代号 Code	材料 Material	适用温度(℃) Applicable Temperature
H	合金钢304、316 Alloy Steel 304, 316	-30~425
F	增强聚四氟乙烯 Reinforced Polyterafluoroethylene(PTFE)	-40~180
X	丁腈橡胶 Buna-N Rubber	-12~82
	乙丙橡胶 Ethylene-propylene Rubber	-35~110
	食品级乙丙胶 Food Ethylene-propyiene Rubber	-35~110
	氟橡胶 Fluorous rubber	-12~135
J	全衬里丁腈橡胶 Full-linina Buna-N Rubber	-12~82
F_4	全衬里聚四氟乙烯 Full-lining polyteafluoroethylene(PTFE)	-40~160

附件的选项 Selection Accessories

根据不同控制和要求可选择下列附件：

切断型附件：单电控电磁阀、双电控制电磁阀、限位开关回讯器。

调节型附件：电气定位器、气动定位器、电气转换器。

气源处理附件：空气过滤减压阀、气源处理三联件。

手动机构：MOD系列

According to the different control and the request can choose the following accessories:

Cut-off Accessofies: single electrically-controlled Solenoid valve, double electally-controlled magnetic valve, signal saver of limit switch.

Adjusting Accessories: electropneumatic positioner, pneumatic positioner, electdc-pneumatic converter.

Air-supply Treatment Accessories: air-filtering reducing valve, F.R.L. combination unit.

Manual Devece: MOD Series

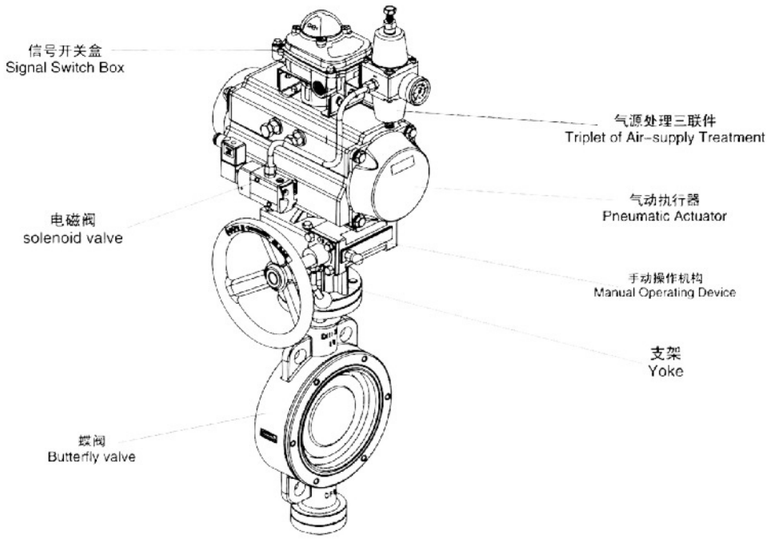

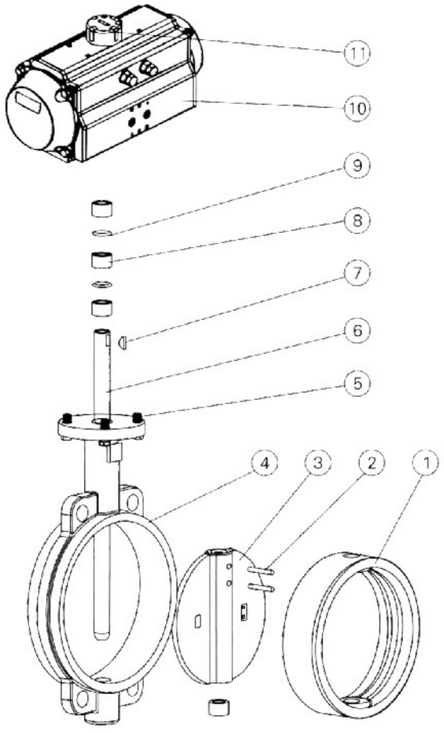

技术规范 Technique norm

设计依据 Design Basis		GB标准 Standard
设计标准 Design standsrd		GB/12238
结构长度 Face to face dimension	对夹 连接 Wafer connecting	GB/12221
连接法兰尺寸 Connecting Flange Size		GB/12221
试验和检验 Test & Inspection		JB/T9092

注：系列蝶阀结构长度及连接法兰尺寸可根据用户要求设计制造。
Note: The structural length and connecting flange size of butterfly valve series can be designed and manufactured as per users' requirements.

主要零件材质表 Form of Main Parts Materials

序号 No.	零件名称 Name of parts	材质 Material		
		Z	C	R
1	阀座 Seat	橡胶、四氟 Rubber、PTFE		
2	圆锥销 Taper Pin	45钢 45 Steel	45钢 45 Steel	不锈钢 Stainless Steel
3	蝶板 Butterfly Plate	球墨铸铁镀硬铬 Ductile Iron–iron Hard Chrome Plating	碳钢或不锈钢 Simple Steel or Stainless Steel	不锈钢 Stainless Steel
4	阀杆 Stem	灰铸铁 Grey Cast Iron	碳钢 Carbon Steel	不锈钢 Stainless Steel
5	螺栓 Screw	35钢 35 Steel	碳钢 Carbon Steel	不锈钢 Stainless Steel
6	螺杆 Stem	45钢 45 Steel	不锈钢 Stainless Steel	不锈钢 Stainless Steel
7	键 Key	45钢 45 Steel	45钢 45 Steel	不锈钢 Stainless Steel
8	衬套 Bushing	铜基粉末冶金 Copper Base Powder Metallurgy	铜基粉末冶金 Copper Base Powder Metallurgy	铜基粉末冶金 Copper Base Powder Metallurgy
9	O形圈 'O' Ring	橡胶 Rubber、氟橡胶 Viton		
10	气动装置 Pneumatic Device	GT系列、AT系列、AW系列 GT Series, AT Series, AW Series		
11	位置指示器 Location Indicator	塑料 Plastic		

注：蝶阀主要零部件及密封圈的材质可根据实际工况条件或用户特殊要求设计选用。
Note: The main spare parts and sealing–ring materials of butterfly valve series can be designed for options as per real working conditions and users' special requirements

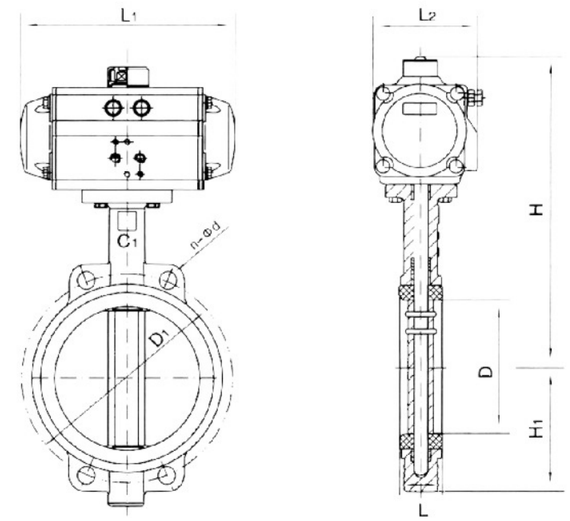

主要外形及连接法兰尺寸 D671X(F、F4、J)–PN6.0、10(0.6、1.0MPa) Main Outline and Connecting Flange Size

公称通径 Nominal diameter DN	外形尺寸 Outline Size					连接尺寸 Connecting Size			执行器型号 Actuator Model
	L	L_1	L_2	~H	H_1	D	D_1	n–Φd	
50		141/159	71/83	269/281					AT050D/AT063S
65	44.7	159/211	83/95	283/303	75	64.5	136.2	4–26.5	AT063D/AT075S
80	45.2	159/248	83/107	289/309	93	78.8	160	8–18	AT063D/AT088S
100	52.1	211/269	95/123	320/338	104	10.4	185	4–24.5	AT075D/AT100S
125	54.4	248/269	107/123	351/366	118	123.3	215	4–23	AT088D/AT100S
150	55.8	269/345	123/152	380/405	133	155.6	238	4–25	AT100D/AT125S
200	60.6	345/409	152/172	435/477	165	202.5	295	4–25	AT125D/AT145S
250	65.6	409/438	172/187	509/552	197	250.5	357	4–29	AT145D/AT160S
300	76.5	438/550	187/215	597/622	224	301.6	407	4–29	AT160D/AT190S
350	76.5	550/600	215/240	653/688	267	333.3	467	4–30	AT190D/AT210S
400	86.5	550/633	215/262	720/787	309	389.6	515	4–30	AT190D/AT240S
450	105.6	600/633	240/262	772/858	328	440.51	565	4–30	AT210D/AT240S
500	131.8	633/730	262/330	867/1004	361	491.5	620	4–33	AT240D/AT270S
600	152	730/1700	330/–	998/1220	459	592.5	725	4–36	AT270D/AW25S
700	163	1320/1970	–/–	1116/1282	520	695	840	4–36	AW25/AW28S
800	188	1430/2700	–/–	1330/1007	591	794.7	950	4–39	AW28/AW35S

注：执行器型号XXX/XXX分别是气动执行器双作用式/单作用式(弹簧复位)。
根据不同的阀门扭矩、使用介质选配，不同的执行器型号，其相关尺寸随之变化。
Note：Data XXX/XXX represent respectively double–acting/singe–acting type(spring reposition).
The relative sizes are subject to change responding to different valve torques, mediums and actuator models.

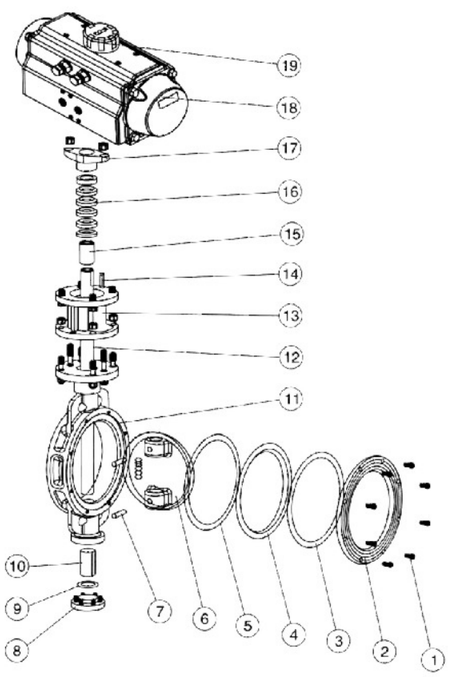

技术规范 Technique norm

设计依据 Design Basis		GB标准 Standard	ANSI标准 Standard
设计标准 Design standsrd		GB/12238	API 609
结构长度 Face to face dimension	对夹连接 Wafer connecting	GB/12221	ANSI B16.10
连接法兰尺寸 Connecting Flange Size		GB/9113、JB/T79	ANSI B16.5(2~24") ANSI B16.47(26~32")
试验和检验 Test & Inspection		JB/T9092	API 598

注：系列蝶阀结构长度及连接法兰尺寸可根据用户要求设计制造。

Note: The structural length and connecting flange size of butterfly valve series can be designed and manufactured as per users' requirements.

主要零件材质表 Form of Main Parts Materials

序号 No.	零件名称 Name of parts	材质 Material		
		C	P	R
1	内六角螺钉 Inner Hexagon Screw	1Cr18Ni9Ti	1Cr18Ni9Ti	1Cr18Ni12Mo2Ti
2	阀盖 Bonnet	WCB	1Cr18Ni9Ti	ZG1Cr18Ni12Mo2Ti
3	垫片 Gasket	1Cr18Ni9Ti	1Cr18Ni9Ti	1Cr18Ni12Mo2Ti
4	阀座 Seat	不锈钢+柔性石墨、PTFE Stainless Steel+Graphite、PTFE		
5	垫片 Gasket	1Cr18Ni9Ti	1Cr18Ni9Ti	1Cr18Ni12Mo2Ti
6	蝶板 Butterfly Plate	WCB	ZG1Cr18Ni9Ti	ZG1Cr18Ni12Mo2Ti
7	圆柱销 Straight Pin	45	1Cr18Ni9Ti	1Cr18Ni12Mo2Ti
8	下盖 Bottom Cover	WCB	ZG1Cr18Ni9Ti	ZG1Cr18Ni12Mo2Ti
9	垫片 Gasket	不锈钢+柔性石墨、PTFE Stainless Steel+Graphite、PTFE		
10	衬套 Bushing	PTFE复合轴承 PTFE Composite Bearings		
11	阀体 Body	WCB	ZG1Cr18Ni9Ti	ZG1Cr18Ni12Mo2Ti
12	阀杆 Stem	1Cr13	1Cr18Ni9Ti	1Cr18Ni12Mo2Ti
13	支架 Yoke	WCB	WCB	WCB
14	键 Key	45	45	45
15	衬套 Bushing	PTFE复合轴承 PTFE Composite Bearings		
16	填料 Packing	柔性石墨、PTFE Graphite、PTFE		
17	压盖 Gland	WCB	ZG1Cr18Ni9Ti	ZG1Cr18Ni12Mo2Ti
18	气动装置 Pneumatic Device	AT系列、AW系列 AT Series、AW Series		
19	位置指示器 Location Indicator	塑料 Plastic		

注：系列蝶阀主要零部件及密封圈的材质可根据实际工况条件或用户特殊要求设计选用。

Note: The main spare parts and sealing-ring materials of butterfly valve series can be designed for options as per real working conditions and users' special requirements.

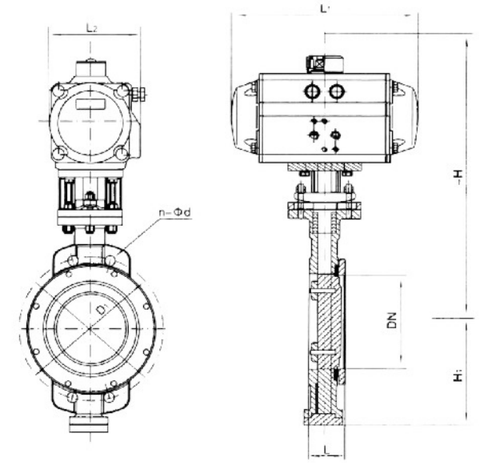

主要外形及连接法兰尺寸 D673H(F、Y)-PN16(1.6MPa) Main Outline and Connecting Flange Size

公称通径 Nominal diameter DN	外形尺寸 Outline Size					连接尺寸 Connecting Size		执行器型号 Actuator Model
	L	L_1	L_2	~H	H_1	D_1	n-Φd	
50	43	159/211	83/95	277/205	65	125	4-Φ18	AT063D/AT075S
65	46	211/248	95/107	287/315	75	145	4-Φ18	AT075D/AT088S
80	46	248/269	107/123	365/375	85	160	8-Φ18	AT088D/AT100S
100	52	269/315	123/141	420/436	130	180	8-Φ18	AT100D/AT115S
125	56	315/345	141/152	436/462	175	210	8-Φ18	AT115D/AT125S
150	56	345/409	152/172	466/543	190	240	8-Φ22	AT125D/AT145S
200	60	409/438	172/187	593/665	215	295	12-Φ22	AT145D/AT160S
250	68	438/559	187/215	682/752	265	355	12-Φ26	AT160D/AT190S
300	78	550/600	215/240	725/772	305	410	12-Φ26	AT190D/AT210S
350	78	600/633	240/262	832/880	340	470	16-Φ26	AT210D/AT240S
400	102	633/730	262/330	862/968	360	525	16-Φ30	AT240D/AT270S
450	114	633	262	945/1005	400	585	20-Φ30	AT240D/AW25S
500	127	730	300	1058/1060	430	650	20-Φ33	AT270D/AW25S
600	154	1320/1970	440/480	1108/1195	190	770	20-Φ36	AW25/AW28S
700	165	1430/2700	480/560	1170/1255	555	840	24-Φ36	AW28/AW35S
800	190	1430/2700	480/560	1325/1365	620	950	24-Φ39	AW28/AW35S

注：蝶阀结构长度及连接法兰尺寸可根据JB/T79标准或用户要求设计制造。
执行器型号 XXX/XXX分别是气动执行器双作用式/单作用式(弹簧复位)。
根据不同阀门扭矩、使用介质适配的执行器型号可能有所不同，相关尺寸随之变化。
以上执行器配置及数据均采用软密封(F)阀门，硬密封阀门的配置及数据请咨询本公司。

Note: The strrctural length and connecting flange size of butterfly valve series can be designed and manufactured as per JB/T79 standard or users' requirements.
Data XXX/XXX represent respectively the double-acting/single-acting type(spring reposition)of pneumatic actuator.
The relative sizes are subject to change responding to the difference in valve torque. medium and actuator model.
The above actuator configuration and data all use soft-sealed valves(F), and hard-sealed valves, or consulting us if you have more questions.

主要外形及连接法兰尺寸 D673H(F、Y)-Class150 Main Outline and Connecting Flange Size

公称通径 Nominal diameter		外形尺寸 Outline Size					连接尺寸 Connecting Size		执行器型号 Actuator Model
DN	in	L	L_1	L_2	~H	H_1	D_1	n-Φd	
50	2	43	159/211	83/95	277/305	65	120.5	4-Φ19	AT063D/AT075S
65	2½	46	211/248	95/107	287/325	75	139.5	4-Φ19	AT075D/AT088S
80	3	46	248/269	107/123	365/391	85	152.5	4-Φ19	AT088D/AT100S
100	4	52	269/315	123/141	420/457	130	190.5	8-Φ19	AT100D/AT115S
125	5	56	315/345	141/152	436/462	175	216	8-Φ22	AT115D/AT125S
150	6	56	345/409	152/172	466/543	190	241.5	8-Φ22	AT125D/AT145S
200	8	60	409/550	172/215	593/665	215	298.5	8-Φ22	AT145D/AT190S
250	10	68	538/600	187/240	682/752	265	362	12-Φ25	AT160D/AT210S
300	12	78	550/633	215/262	702/820	305	432	12-Φ25	AT190D/AT240S
350	14	78	600/633	240/262	832/938	340	476	12-Φ29	AT210D/AT240S
400	16	102	633/730	262/330	910/968	360	540	16-Φ29	AT240D/AT270S
450	18	114	633/730	262/330	1005/1010	400	578	16-Φ32	AT240D/AT270S
500	20	127	730/1700	330/440	1058/1065	430	635	20-Φ32	AT270D/AW25S
600	24	154	1180/1700	365/440	1110/1195	490	749.5	20-Φ35	AW20/AW25S
700	28	165	1320/1970	440/480	1255/1295	555	863.6	28-Φ35	AW25/AW28S
800	32	190	1430/2700	480/560	1325/1365	620	978	28-Φ41	AW28/AW35S

主要外形及连接法兰尺寸 D673H(F、Y)-Class 300 Main Outline and Connecting Flange Size

公称通径 Nominal diameter		外形尺寸 Outline Size					连接尺寸 Connecting Size		执行器型号 Actuator Model
DN	in	L	L_1	L_2	~H	H_1	D_1	n-Φd	
50	2	43	211/248	95/107	277/305	65	127	8-Φ19	AT075D/AT088S
65	2½	46	248/269	107/123	310/341	75	149	8-Φ22	AT088D/AT100S
80	3	46	269/315	123/141	375/412	85	168.5	8-Φ22	AT100D/AT115S
100	4	52	315/409	141门72	436/462	130	200	8-Φ22	AT115D/AT145S
125	5	56	345/438	152/187	462/513	175	235	8-Φ22	AT125D/AT160S
150	6	56	409/550	172/215	543/615	190	270	12-Φ22	AT145D/AT190S
200	8	60	438/600	187/240	665/760	215	330	12-Φ25	AT160D/AT210S
250	10	68	550/633	215/262	752/858	265	387.5	16-Φ29	AT190D/AT240S
300	12	78	600/730	240/330	820/880	305	451	16-Φ32	AT210D/AT270S
350	14	78	633/730	262/330	938/940	340	514.5	20-Φ32	AT240D/AT270S
400	16	102	730/1700	330/440	970/1055	360	571.5	20-Φ35	AT270D/AW25S
450	18	114	1180/1700	365/440	1005/1090	400	628.5	24-Φ35	AW20/AW25S
500	20	127	1320/1970	440/480	1145/1185	430	686	24-Φ35	AW25/AW28S
600	24	154	1430/2700	480/560	1195/1235	490	813	24-Φ41	AW28/AW35S

注：蝶阀结构长度及连接法兰尺寸可根据JB/T79标准或用户要求设计制造。
执行器型号XXX/XXX分别是气动执行器双作用式/单作用式(弹簧复位)。
根据不同阀门扭矩、使用介质适配的执行器型号可能有所不同，相关尺寸随之变化。
以上执行器配置及数据均采用软密封(F)阀门，硬密封阀门的配置及数据请咨询本公司。

Note: The strrctural length and connecting flange size of butterfly valve series can be designed and manufactured as per JB/T79 standard or users' requirements.
Data XXX/XXX represent respectively the double-acting/single-acting type(spring reposition)of pneumatic actuator.
The relative sizes are subject to change responding to the difference in valve torque. medium and actuator model.
The above actuator configuration and data all use soft-sealed valves(F), and hard-sealed valves, or consulting us if you have more questions.

技术规范 Technique norm

设计依据 Design Basis		GB标准 Standard	ANSI标准 Standard
设计标准 Design standsrd		GB/12238	API 609
结构长度 Face to face dimension	法兰连接 Flange connecting	GB/12221	ANSI B16.10
连接法兰尺寸 Connecting Flange Size		GB/9113、JB/T79	ANSI B16.5(2~24") ANSI B16.47(26~32")
试验和检验 Test & Inspection		JB/T9092	API 598

注：蝶阀结构长度及连接法兰尺寸可根据用户要求设计制造。
Note: The structural length and connecting flange size of butterfly valve series can be designed and manufactured as per users' requirements.

主要零件材质表 Form of Main Parts Materials

序号 No.	零件名称 Name of parts	材质 Material		
		C	P	R
1	内六角螺钉 Inner Hexageon Screw	1Cr18Ni9Ti	1Cr18Ni9Ti	1Cr18Ni12Mo2Ti
2	阀盖 Bonnet	WCB	1Cr18Ni9Ti	ZG1Cr18Ni12Mo2Ti
3	垫片 Gasket	1Cr18Ni9Ti	1Cr18Ni9Ti	1Cr18Ni12Mo2Ti
4	阀座 Seat	不锈钢+柔性石墨、PTFE Stainless Steel+Graphite, PTFE		
5	垫片 Gasket	1Cr18Ni9Ti	1Cr18Ni9Ti	1Cr18Ni12Mo2Ti
6	蝶板 Butterfly Plate	WCB	ZG1Cr18Ni9Ti	ZG1Cr18Ni12Mo2Ti
7	圆柱销 Straight Pin	45	1Cr18Ni9Ti	1Cr18Ni12Mo2Ti
8	下盖 Bottom Cover	WCB	ZG1Cr18Ni9Ti	ZG1Cr18Ni12Mo2Ti
9	垫片 Gasket	不锈钢+柔性石墨、PTFE Stainless Steel+Graphite、PTFE		
10	衬套 Bushing	PTFE复合轴承 PTFE Composite Bearings		
11	阀体 Body	WCB	ZG1Cr18Ni9Ti	ZG1Cr18Ni12Mo2Ti
12	阀杆 Stem	1Cr13	1Cr18Ni9Ti	1Cr18Ni12Mo2Ti
13	支架 Yoke	WCB	WCB	WCB
14	键 Key	45	45	45
15	衬套 Bushing	PTFE复合轴承 PTFE Composite Bearings		
16	填料 Packing	柔性石墨、PTFE Graphite, PTFE		
17	压盖 Gland	WCB	ZG1Cr18Ni9Ti	ZG1Cr18Ni12Mo2Ti
18	气动执行器 Pneumatic Actuator	AT系列、AW系列 AT Series, AW Series		

注：蝶阀主要零部件及密封圈的材质可根据实际工况条件或用户特殊要求设计选用。
Note: The main spare parts and sealing-ring materials of butterfly valve series can be designed for options as per real working conditions and users' special requirements.

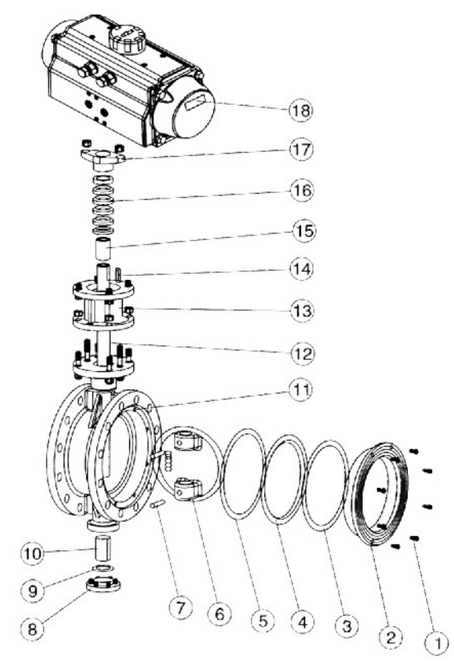

气动法兰式三偏心蝶阀
Pneumatic Flanged Triple Eccentric Butterfly Valve

主要外形及连接法兰尺寸 D643H(F、Y)-Class150 Main Outline and Connecting Flange Size

公称通径 Nominal diameter		外形尺寸 Outline Size					连接尺寸 Connecting Size					执行器型号 Actuator Model
DN	in	L	L_1	L_2	~H	H_1	D	D_1	D_2	f	n-Φd	
50	2	108	159/211	83/95	277/305	65	152	120.5	92	2	4-Φ19	AT063D/AT075S
65	2 1/2	112	211/248	95/107	287/325	75	178	139.5	105	2	4-Φ19	AT075D/AT088S
80	3	114	248/269	107/123	365/391	85	190	152.5	127	2	4-Φ19	AT088D/AT100S
100	4	127	269/315	123/141	420/457	130	229	190.5	157	2	8-Φ19	AT100D/AT115S
125	5	140	315/345	141/152	436/462	175	254	216	186	2	8-Φ22	AT115D/AT125S
150	6	140	345/409	152/172	466/543	190	279	241.5	216	2	8-Φ22	AT125D/AT145S
200	8	152	409/550	172/215	593/665	215	343	298.5	270	2	8-Φ22	AT145D/AT190S
250	10	165	438/600	187/240	682/752	265	406	362	324	2	12-Φ25	AT160D/AT210S
300	12	178	600/633	240/262	702/820	305	483	432	381	2	12-Φ25	AT190D/AT240S
350	14	190	600/633	240/262	832/938	340	533	476	413	2	12-Φ29	AT210D/AT240S
400	16	216	633/730	262/330	910/968	360	597	540	470	2	16-Φ29	AT240D/AT270S
450	18	222	633/730	262/330	1005/1010	400	635	578	533	2	16-Φ32	AT240D/AT270S
500	20	229	730/1700	330/440	1058/1065	430	699	635	584	2	20-Φ32	AT270D/AW25S
600	24	267	1180/1700	365/440	1110/1195	490	813	749.5	682	2	20-Φ35	AW20/AW25S
700	28	292	1320/1970	440/480	1255/1295	555	947	863.6	800	2	28-Φ35	AW25/AW28S
800	32	318	1430/2700	480/560	1325/1365	620	1060	978	914	2	28-Φ41	AW28/AW35S

主要外形及连接法兰尺寸 D643H(F、Y)-Class 300 Main Outline and Connecting Flange Size

公称通径 Nominal diameter		外形尺寸 Outline Size					连接尺寸 Connecting Size					执行器型号 Actuator Model
DN	in	L	L_1	L_2	~H	H_1	D	D_1	D_2	f	n-Φd	
50	2	108	211/248	95/107	277/305	65	165	127	92	2	8-Φ19	AT075D/AT088S
65	2 1/2	112	248/269	107/123	310/341	75	190	149	105	2	8-Φ22	AT088D/AT100S
80	3	114	269/315	123/141	375/412	85	210	168.5	127	2	8-Φ22	AT100D/AT115S
100	4	127	315/345	141/152	436/462	130	254	200	157	2	8-Φ22	AT115D/AT145S
125	5	140	345/438	152/187	462/513	175	279	235	186	2	8-Φ22	AT125D/AT160S
150	6	140	438/600	187/240	543/615	190	318	270	216	2	12-Φ22	AT145D/AT160S
200	8	152	550/600	215/240	665/760	215	381	330	270	2	12-Φ25	AT160D/AT210S
250	10	165	600/633	240/262	752/858	265	445	387.5	324	2	16-Φ29	AT190D/AT240S
300	12	178	600/730	240/262	820/880	305	521	451	381	2	16-Φ32	AT210D/AT270S
350	14	190	633/1700	262/440	938/940	340	584	514.5	413	2	20-Φ32	AT240D/AW25S
400	16	216	730/1700	330/440	970/1055	360	648	571.5	470	2	20-Φ35	AT270D/AW25S
450	18	222	730/1700	330/440	1005/1090	400	711	628.5	533	2	24-Φ35	AT270D/AW25S
500	20	229	1180/1970	365/480	1145/1185	430	775	686	584	2	24-Φ35	AW20/AW25S
600	24	267	1320/1970	440/480	1195/1235	490	914	813	682	2	24-Φ41	AW25/AW28S

注：蝶阀结构长度及连接法兰尺寸可根据JB/T79标准或用户要求设计制造。
执行器型号XXX/XXX分别是气动执行器双作用式/单作用式(弹簧复位)。
根据不同阀门扭矩、使用介质适配的执行器型号可能有所不同，相关尺寸随之变化。
以上执行器配置及数据均采用软密封(F)阀门，硬密封阀门的配置及数据请咨询本公司。

Note: The strrctural length and connecting flange size of butterfly valve series can be designed and manufactured as per JB/T79 standard or users' requirements.
Data XXX/XXX represent respectively the double-acting/single-acting type(spring reposition)of pneumatic actuator.
The relative sizes are subject to change responding to the difference in valve torque. medium and actuator model.
The above actuator configuration and data all use soft-sealed valves(F), and hard-sealed valves, or consulting us if you have more questions.

调节阀系列
Control Valve Series

产品说明 Product Manual

采用套筒导向结构，压力平衡式阀芯，是为重负荷工况而设计的，采用双阀座密封，应用于泄漏要求不高的场合，阀体结构紧凑，流体通道呈S流线型，在结构上设有改善套筒周围流体平衡流动的导流翼，优点是压降损失小、流通量大，可调范围广，流量特性精度高。阀芯利用压力平衡结构，通过较小的执行机构推力就可控制高压等工况，广泛应用于要求动态稳定性好、高低温、高压管线的液体控制。笼式导向，导向面积大，稳定性好，结构紧凑。

It adopts sleeve guide structure and pressure-balanced valve core, which is designed for heavy-duty working conditions. It adopts double valve seat seal and is used in occasions where leakage requirements are not high. It is provided with a guide vane to improve the balanced flow of fluid around the sleeve. The advantages are small pressure drop loss, large flow rate, wide adjustable range and high flow characteristic accuracy. The valve core uses a pressure balance structure, and can control high pressure and other working conditions through a small actuator thrust. It is widely used in liquid control that requires good dynamic stability, high and low temperature, and high pressure pipelines. Cage guide, large guide area, good stability and compact structure.

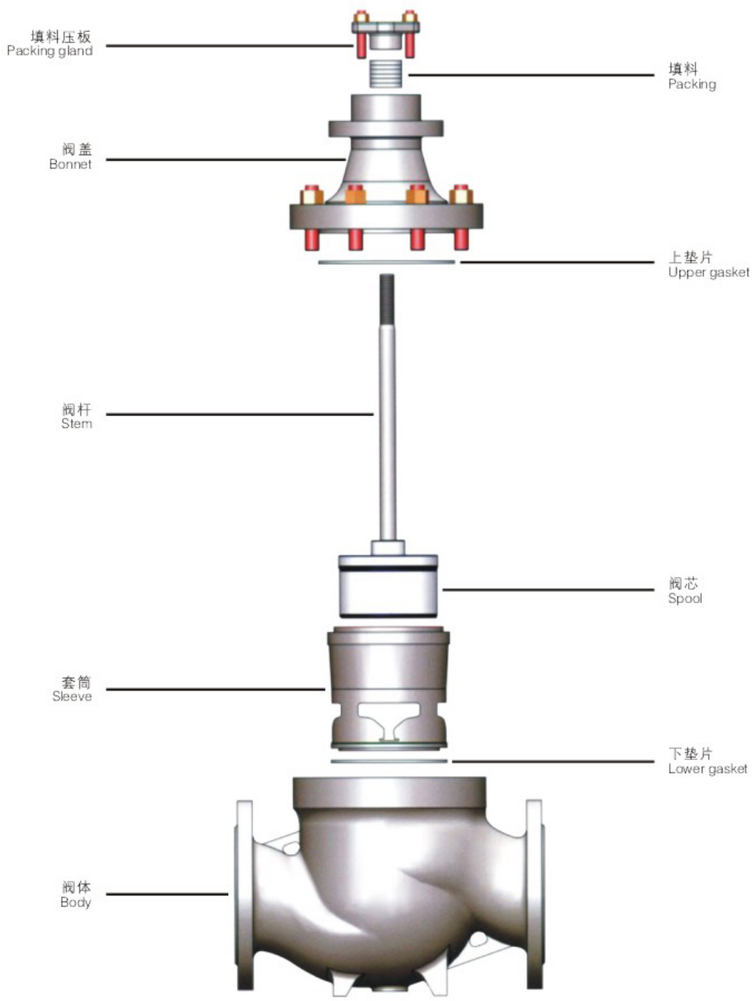

尺寸规格范围 Size specifications

2"~24" DN40~DN600

压力等级范围 Ressure range

ASME 150~900# PN1.6~PN16.0MPa

泄漏量执行标准
Leakage performance standard

ASME B16.104 GB/T4213-2008
GB/T17213.IEC60534

法兰连接形式标准
Flange connection standard

法兰式：JB/T79-2015 GB/T9113-2010
HG/T20592-2009/ASME B16.5
对焊式：GB/T9124-2010/ASME B16.25
GB/T12224-2015 对焊端

Flange type: JB/T79-2015 GB/T9113-2010
HG/T20592-2009/ASME B16.5
Butt welding: GB/T9124-2010/ASME B16.25
GB/T12224-2015 Butt welding end

控制阀参数说明 Control valve parameter description

阀内件特点：双阀座结构，套筒导向平衡内件，分体式或整体式标准阀笼
阀体类型：直通式、角式、Z形
上阀盖型式：常温标准型、高温散热型、伸长型
温度范围：-100℃~560℃
阀杆密封型式：普通式标准填料密封、高温型填料密封、波纹管密封(可选)
标准泄漏等级：Class IV(标准型，金属阀座)
流量特性：等百分比，直线
与管道连接方式：法兰式、对焊式
可调比：50:1

Valve trim features: Double seat structure, sleeve guide balanced trim, split or integral standard cage
Body type: Straight-through, Angled, Z-shaped
Upper bonnet type: Normal temperature type, High temperature heat dissipation type, extension type
Temperature range: -100℃~560℃
Stem Seal Type: Standard Standard Packing Seal
High temperature type packing seal, bellows seal (optional)
Standard leak Class: Class IV (standard, metal seat)
Flow characteristics: Equal percentage, straight line
Connection with pipelines: Flanged, butt welded
Adjustable ratio: 50:1

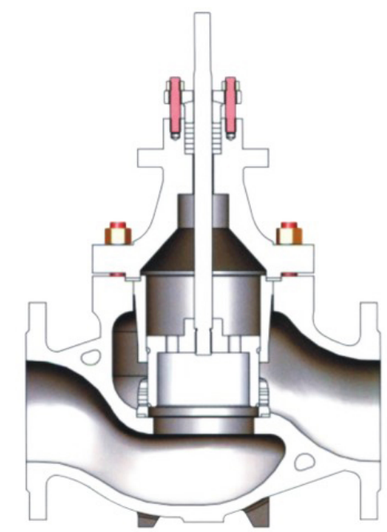

适配直行程执行机构 Adaptable linear actuator

a. 气动薄膜执行机构
b. 气动活塞执行机构
c. 电动执行机构
d. 电液动执行机构

a. Pneumatic membrane actuator
b. Pneumatic piston actuator
c. Electric actuator
d. Electro-hydraulic actuator

部件名称 Part Name	可选用材料 Optional materials	部件名称 Part Name	可选用材料 Optional materials
阀体、上阀盖 Body, Upper cap	ASTM A216 WCB/WCC ASTM A217 WC6/WC9 ASTM A105	阀座 Seat	ASTM A182 F304/F316/F316L ASTM A276 410/420
	ASTM A351 CF8/CF3/CF8M/CF3M ASTM A182 F304/F316/F316L	阀笼 Cage	ASTM A351 CF8/CF3/CF8M/CF3M ASTM A182 F304/F316/F316L
阀芯 Spool	ASTM A351 CF8/CF3/CF8M/CF3M ASTM A182 F304/F316/F316L ASTM A276 410/420	阀杆 Stem	17-4PH ASTM A276 410/420 ASTM A276 F304/F316/F316L

注：特殊合金材质未在列表中表述，如需了解咨询本公司工程师。
Note: Special alloy materials are not stated in the presentation. For information on consulting our engineers.

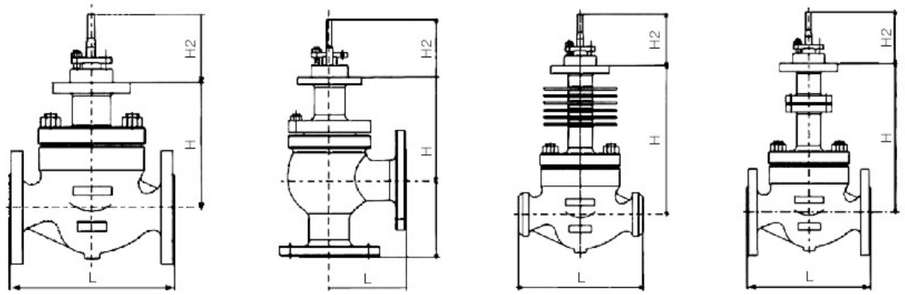

阀门结构尺寸 Valve structure size

阀门尺寸 (DN) Valve size	直通式阀体结构 Straight-through valve body structure							角式阀体结构 Angle valve body structure						
	L			H			H2	L			H			H2
	ANSI 150# PN1.6 JIS 10K	ANSI 300# PN4.0 JIS 30K	ANSI 600# PN6.4 JIS 40K	标准型 Standard type	散热型 Thermal type	波纹管型 Bellows type		ANSI 150# PN1.6 JIS 10K	ANSI 300# PN4.0 JIS 30K	ANSI 600# PN6.4 JIS 40K	标准型 Standard type	散热型 Thermal type	波纹管型 Bellows type	
25	184	184	212	130	255	240	95	100	100	115	150	275	260	100
32	200	200	225	140	265	250	95	105	105	130	160	285	270	100
40	222	222	254	145	270	275	95	115	115	130	165	290	275	100
50	254	254	290	160	285	270	95	125	125	150	190	315	300	100
65	276	276	316	245	350	360	95	145	145	170	285	370	400	135
80	298	298	340	245	350	360	130	155	155	190	285	370	400	135
100	352	352	390	255	360	370	130	175	175	215	295	380	410	135
125	410	410	448	305	445	425	135	200	200	250	370	500	490	135
150	451	451	510	325	485	450	140	225	225	275	390	520	520	135
200	550	550	650	365	520	490	140	275	275	325	430	560	530	135
250	678	678	690	455	635	560	140	–	–	–	–	–	–	–
300	737	737	788	475	675	610	170	–	–	–	–	–	–	–
350	889	889	910	550	750	–	170	–	–	–	–	–	–	–
400	900	900	–	575	780	–	170	–	–	–	–	–	–	–
450	950	950	–	600	805	–	150/180	–	–	–	–	–	–	–
500	1267	1308	1372	1100	1300	–	–	–	–	–	–	–	–	–
600	1556	1600	1676	1150	1350	–	–	–	–	–	–	–	–	–

额定CV值及行程 Rated CV value and itinerary

公称通径 Nominal diameter (mm)	阀芯尺寸 Spool size (mm)	额定 Rated CV		行程 Travel (mm)
		EQ %	Linear	
40	40	24	30	25
50	50	44	50	25
65	65	68	85	40
80	80	99	125	40
100	100	175	200	40
125	125	275	310	60
150	150	360	420	60
200	200	650	690	60
250	250	1000	1000	100
300	300	1500	1600	100
350	350	2000	2000	130
400	400	2800	2800	200
450	450	3600	3600	200
500	500	4300	4300	300
600	600	6000	6000	300

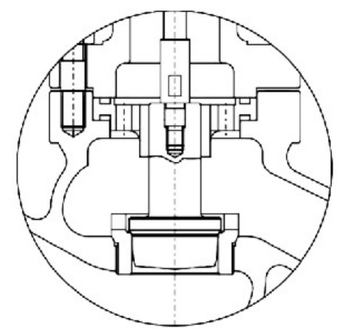

HTS单座调节阀

HTS单座调节阀是顶导向式结构调节阀，流体通道呈“S”流线型，压降损失小，流量大、可调范围广，流量特性曲线精度高，阀芯导向面积大，抗振性好。配用多弹簧气动薄膜执行机构或电动执行机构，具有体积小、重量轻、输出力大，安装方便、可用于控制各种不同压力和温度的流体等特点。

HTS Single Seat Control Va lve

HTS Single seat control valve is a kind of control valve with top guiding structure. It has "S-streanline" fluid channel, small pressure drop loss, large flow and adjustable range. It has high accuracy of flow characteristic, large plug guiding area, good vibration resistance.

It is equipped with multi-spring pneumatic diaphragm actuator or electric actuator. It has characteristics of small size, light weight, large output force, easy installation, which can be used to control a variety of different pressure and temperature of the fluid.

标准规格 Standard Specifications

形式 Manner	直通单座铸造球型阀 Straight Through Single Seat Cast Ball Valve
公称通径 Nominal diameter	15, 20, 25, 32, 40, 50, 65, 80, 100, 125, 150, 200mm
公称压力 Nominal pressure	ANSI Class 150, 300, 600; JIS 10K, 20K, 30K; PN1.6, 4.0, 6.4MPa*
连接形式 Connection Type	法兰型：FF，RF，RJ，TG，MFM/焊接型：SW(40~50mm)；BW(65~200mm) Flange Type: FF, RF, RJ, TG, MFM/Weld Type: SW(40~50mm); BW(65~200mm)
阀体及上阀盖材质 The Material of Body and Bonnet	SCPH2/WCB, SCPH21/WC6, SCS13A/CF8,SCS14A/CF8M, SCS16A/CF3M, Ti 等各种材质的使用温度，压力范围 SCPH2/WCB, SCPH21/WC6, SCS13A/CF8,SCS14A/CF8M, SCS16A/CF3M, Ti Operating temperature and pressure range of various materials
上阀盖形式 Upper bonnet form	常温型(P)：-17~+230℃/伸长I型(e I)：-45~-17℃和+230~+566℃/伸长li型(e li)：-100~-45℃ Normal Temperature (P): -17~+230℃/Elongation Type (e I): -45~-17℃ or +230~+566℃/ Elongation Type li (e li): -100~-45℃
压盖形式 Gland manner	螺栓压紧式 Screw Fastening Type
填料 Packing	V型聚四氟乙烯填料、石墨填料 V-type PTFE Packing, Graphite Packing
垫片 Gasket	锯齿型 Zigzag
表面涂层 Surface coating	蓝色(环氧树脂)。但是阀体材质为不锈钢时，本部分不加涂层。 Blue (Epoxy). But When the Valve Body Material is Stainless Steel, this can not add coating.

* 法兰标准 Flange Standard: JIS B2201-1984, JB/T79.1-94 (PN1.6MPa)，JB/T79.2-94(PN4.0, 6.4MPa), ANSI B16.5-2009, HG20592-2009, HG20615-2009.

Cv值和行程 Cv Value and Stroke

公称通径 Nominal Diameter	15			20			25			32			40			50		
阀座直径 Seat Diameter	10	12	15	15	20	20	25	25	32	25	32	40	32	40	50			
额定Cv值 Rated Cv	1.6	2.5	4	4	6.3	6.3	10	10	17	10	17	24	17	24	40			
额定行程 Rated Stroke	16									25								
公称通径 Nominal Diameter	65			80			100			125			150			200		
阀座直径 Seat Diameter	40	50	65	50	65	80	65	80	100	80	100	125	100	125	150	125	150	200
额定Cv值 Rated Cv	24	40	63	40	63	100	63	100	160	100	160	250	160	250	400	250	400	630
额定行程 Rated Stroke	40									60								

执行机构 Actuator

	气动薄膜式 Pneumatic Diaphragm Type	气缸活塞式 Cylinder Piston Type		电子式 Electronic Type	智能式 Intelligent Type
	ZJHA/B	ZTCLS	ZTCL	381 系列 381 Series	ZM 系列 ZM Series
	多弹簧型 Multiple Springs Type	单作用 Single Action	双作用 Double Action		
用途 Use	调节 Regulation	调节 Regulation		调节 Regulation	调节 Regulation
供气压力或供给电压 Supply Gas Pressure and Supply Voltage	供气压力(弹簧范围) Supply Gas Pressure (spring range) 140 (20~100) KPa 160 (20~100) KPa 280 (80~240) KPa 400 (80~240) KPa	供气压力300~500KPa Supply Gas Pressure 300~500KPa		电压: 220/380V 50Hz 输入信号: 4~20mA DC Voltage: 220/380V 50Hz Input Signal: 4~20mA DC	电压: 220/380V 50Hz 输入信号: 4~20mA DC Voltage: 220/380V 50Hz Input Signal: 4~20mA DC
接口 Connector	空气配管: RC1/4 Air Piping: RC1/4	空气配管: G1/8; G1/4; G1/2; G3/8 Air Piping: G1/8; G1/4; G1/2; G3/8		配线: PG13.5 Wiring: PG13.5	配线: PG13.5 Wiring: PG13.5
正作用 Positive Action	气压增加阀闭 Adding Pressure Valve Will Be Closed	气压增加阀闭 Adding Pressure Valve Will Be Closed		输入信号阀闭 Inputting The Signal Valve Will Be Closed	输入信号阀闭 Inputting The Signal Valve Will Be Closed
反作用 Negative Action	气压增加阀开 Adding Pressure Valve Will Be Opened	气压增加阀开 Adding Pressure Valve Will Be Opened		气压增加阀开 Adding Pressure Valve Will Be Opened	气压增加阀开 Adding Pressure Valve Will Be Opened
回差 Hystersis	≤1%FS(带定位器) ≤3%FS(不带定位器) ≤5%FS(配HA1型) ≤1%FS(With Positioner) ≤3%FS(No Positioner) ≤5%FS(Match Type Ha1)	≤1%FS(带定位器) ≤3%FS(不带定位器) ≤1%FS(With Positioner) ≤3%FS(No Positioner)		≤±1%FS	≤±1%FS
基本误差 Limit of Intrinsic Error	≤±1%FS(带定位器) ≤±5%FS(不带定位器) ≤±2%FS(配HA1型) ≤±1%FS(With Positioner) ≤±5%FS(No Positioner) ≤±2%FS(Match Type Ha1)	≤±1%FS(带定位器) ≤±3%FS(不带定位器) ≤±1%FS(With Positioner) ≤±3%FS(No Positioner)		≤±1%FS	≤±1%FS
环境温度 Ambiance Temperature	标准型 -30~+70℃ 高温型 0~+100℃ 低温型 -40~+40℃ Normal Temperature Type -30~+70℃ High Temperature Type 0~+100℃ Low Temperature Type -40~+40℃	标准型 -20~+60℃ 高温型 0~+100℃ 低温型 -50~+60℃ Normal Temperature Type -20~+60℃ High Temperature Type 0~+100℃ Low Temperature Type -50~+60℃		-20~+70℃	-25~+70℃
油漆颜色 Painting Color	蓝色色标10B5/10 Blue Scale 10B5/10	蓝色色标10B5/10 Blue Scale 10B5/10			
附件 Accessory	定位器/空气过滤/减压阀 保位阀/阀位传送器/手轮机构 Positioner/Air Filtration Pressure Reducing Valve Transmitter/Handwheel	定位器/空气过滤/减压阀 保位阀/阀位传送器/手轮机构 Positioner/Air Filtration Pressure Reducing Valve Transmitter/Handwheel		一体式 Integrated Type	一体式 Integrated Type

司太立堆焊工作温度和压差范围
Operating Temperature and Differential Pressure Range of Stellite Surfacing

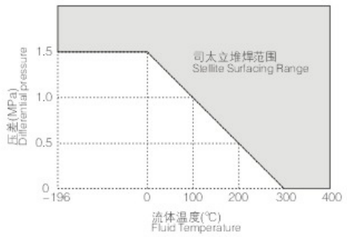

备注：
1. 硬化处理方法：司太立堆焊或440B硬化。
2. 用途为空化/闪蒸禁油及有关闭要求的场合，无论工作温度和压差如何，建议堆焊司太立合金。
3. 空化/闪蒸或者水的温度超过100℃建议用440B。

备注：
1. 饱和蒸汽、热水等有可能产生腐蚀及含有杂质的场合建议用金属密封。
2. 用于禁油处理时，软密封采用含玻璃纤维PTFE。

软阀座工作温度和压差范围
Operating Temperature and Differential Pressure Range of Soft Seal Seat

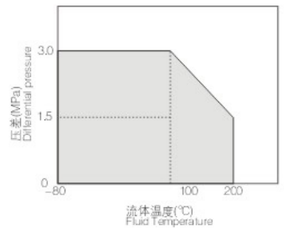

Remark:
1. Hardening treatment: Starlite surfacing or 440B hardening.
2. It is used for cavitation. flash evaporation of forbidden oil or other occasions with closing requirements. Regardless of the working temperature and pressure difference, it is recommended to surfacing sitailai alloy.
3. It is suggested that using 440B when the temperature of cavitation, flash or water is over 100℃.

Remark:
1. It is recommended to use metal seal when the occasions are saturated steam, hot water, or may cause corrosion and contain impurities.
2. It is used for soft seal by glass fiber and PTFE when treating oil prohibition.

选型参数表 Model Selection Parameter Table

阀座直径(mm) Seat Diameter		10	12	15	20	25	32	40	50	65	80	100	125	150	200
额定流量系数Cv Rated Flow Cv Value	等百分比 Equal Percentage	1.6	2.5	4	6.3	10	17	24	40	63	100	160	250	400	630
	线性 Straight	1.8	2.8	4.4	6.9	11	17.6	27.5	44	69	110	176	275	440	690
公称通径 Nominal Diameter	行程 Stroke	可选流量系数Cv (★ 标准型 ● 推荐 ○ 定制) Optional Coefficient of Flow Cv (★ Standard Type ● Recommend Type ○ Customized Type)													
DN20	16mm	●	●	●	★										
DN25		●	●	●	●	★									
DN32	25mm	○	○	○	○	○	★								
DN40			○	○	○	○	●	★							
DN50				○	○	○	●	●	★						
DN65	40mm						○	○	○	★					
DN80							○	○	○	●	★				
DN100							○	○	○	●	●	★			
DN125	60mm									○	○	○	★		
DN150											○	○	●	★	
DN200											○	○	●	●	★
气动执行机构膜片有效面积Ae(cm²) Pneumatic actuator diaphragm active area Ae(cm²)		ZJHA/B-22					ZJHA/B-23			ZJHA/B-34			ZJHA/B-45		
		350					350			560			900		
作用方式 Action	弹簧范围 Range of Spring	金属密封允许压差(MPa) Allowable pressure differential of metal seal (MPa)													
气开 Open	20-100KPa	4.46	3.09	1.98	1.16	0.7	0.44	0.28	0.18	0.17	0.11	0.07	0.07	0.05	0.03
	40-200KPa	6.4	6.4	5.94	3.34	2.14	1.31	0.84	0.53	0.51	0.33	0.21	0.22	0.15	0.09
	80-240KPa	6.4	6.4	6.4	6.4	4.99	3.05	1.95	1.25	1.18	0.78	0.5	0.51	0.36	0.21
气关 Close	20-100KPa	6.4	6.19	3.96	2.23	2.14	0.87	0.56	0.35	0.34	0.22	0.14	0.15	0.1	0.06
	40-200KPa	6.4	6.4	6.4	6.4	6.4	5.86	3.64	2.3	2.21	1.43	0.91	0.95	0.66	0.37
	80-240KPa	6.4	6.4	6.4	6.4	6.4	6.4	5.04	3.18	3.06	1.98	1.26	1.32	0.92	0.52

高精度流量特性曲线
High Precision Flow Characteristic of Valve

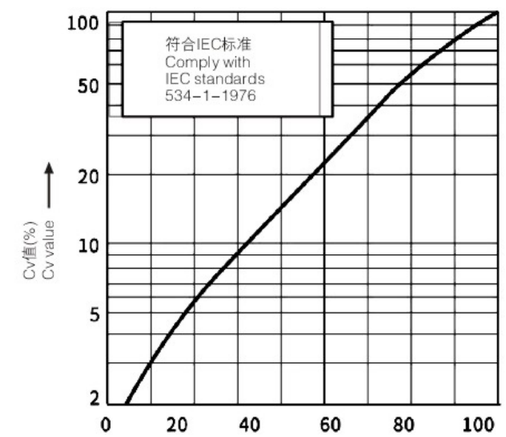

行程(%)
线性特性(LCF金属阀座)
Stroke (%)
Linear Characteristic (LCF Metal Seat)

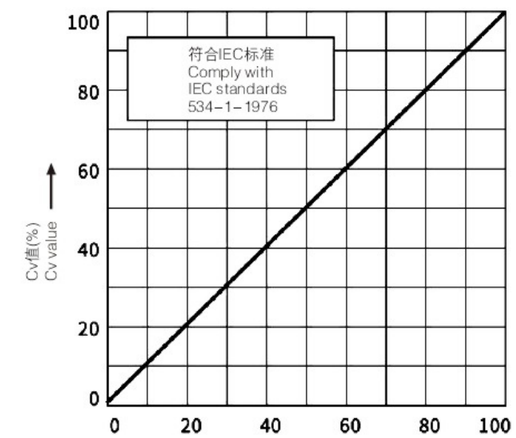

行程(%)
线性特性(LCF金属阀座)
Stroke (%)
Linear Characteristic (LCF Metal Seat)

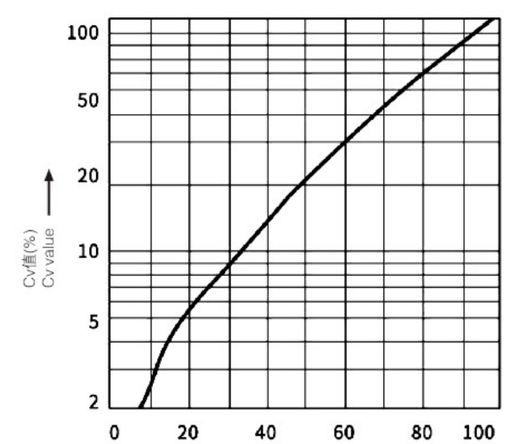

行程(%)
线性特性(LCF金属阀座)
Stroke (%)
Linear Characteristic (LCF Metal Seat)

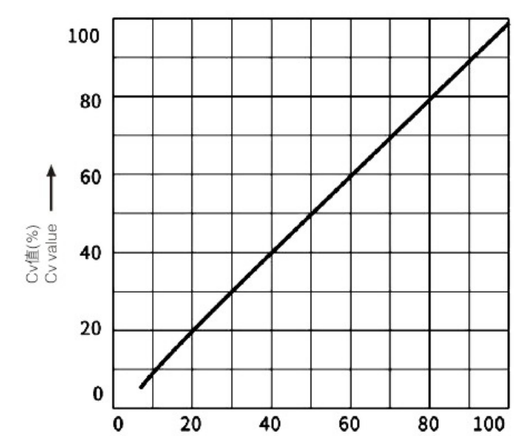

行程(%)
线性特性(LCF金属阀座)
Stroke (%)
Linear Characteristic (LCF Metal Seat)

高精度流量特性曲线
High Precision Flow Characteristic of Valve

单位 Unit: MPa

阀门尺寸 Valve Size Inch(mm)	阀芯尺寸 Core Size Inch(mm)	额定行程 Rated Stroke (mm)	额定Cv值 Rated Cv									
			阀门开度%行程 The Opening Degree of Valve % Trip									
			等百分比特性 Requal Percentage Characteristics					直线特性 Straight Characteristics				
			10%	25%	50%	75%	100%	10%	25%	50%	75%	100%
3/4 (20)	1/4(8)	16	0.09	0.17	0.34	0.95	1.87	0.27	0.68	1.09	1.49	2.10
	3/8(10)		0.14	0.27	0.53	1.48	2.92	0.42	1.06	1.69	2.32	3.27
	1/2(15)		0.22	0.43	0.85	2.37	4.67	0.67	1.66	2.65	3.65	5.13
	3/4(20)		0.34	0.68	1.35	3.74	7.35	1.05	2.60	4.16	5.72	8.05
1 (25)	1/2(15)	16	0.22	0.43	0.85	2.37	4.67	0.67	1.66	2.56	3.65	5.13
	3/4(20)		0.34	0.68	1.35	3.74	7.35	1.05	2.60	4.16	5.72	8.05
	1(25)		0.55	1.08	2.14	5.93	11.67	1.67	4.15	6.64	9.11	12.84
1 1/4 (32)	3/4(20)	25	0.34	0.68	1.35	3.74	7.35	1.05	2.60	4.16	5.72	8.05
	1(25)		0.55	1.08	2.14	5.93	11.67	1.67	4.15	6.64	9.11	12.84
	1 1/4(32)		0.87	1.73	3.42	9.49	18.67	2.67	6.63	10.62	14.58	20.54
1 1/2 (40)	1(25)	25	0.55	1.08	2.14	5.93	11.67	1.67	4.15	6.64	9.11	12.84
	1 1/4(32)		0.87	1.73	3.42	9.49	18.67	2.67	6.63	10.62	14.58	20.54
	1 1/2(40)		1.36	2.72	5.35	14.82	29.17	4.17	10.37	16.59	22.79	32.09
2 (50)	1 1/4(32)	25	0.87	1.73	3.42	9.49	18.67	2.67	6.63	10.62	14.58	20.54
	1 1/2(40)		1.36	2.72	5135	14.82	29.17	4.17	10.37	16.59	22.79	32.09
	2(50)		2.18	4.32	8.54	23.71	46.68	6.67	16.68	26.56	36.46	51.35
2 1/2 (65)	1 1/2(40)	40	1.36	2.72	5.35	14.82	29.17	4.17	10.37	16.59	22.79	32.09
	2(50)		2.18	4.32	8.54	23.71	46.68	6.67	16.58	26.56	36.46	51.35
	2 1/2(65)		3.34	6.81	13.45	37.35	73.52	10.47	20.01	41.63	57.17	80.52
3 (80)	2(50)	40	2.18	4.32	8.54	23.71	46.68	6.67	16.58	26.56	36.46	51.35
	2 1/2(65)		3.34	6.81	13.45	37.35	73.52	10.47	26.01	41.63	57.17	80.52
	3(80)		5.45	10.81	21.36	59.28	116.7	16.69	41.46	66.37	91.14	128.4
4 (100)	2 1/2(65)	40	3.34	6.81	13.45	37.35	73.52	10.47	26.01	41.63	57.17	80.52
	3(80)		5.45	10.81	21.36	59.28	116.7	16.69	41.46	66.37	91.14	128.4
	4(100)		8.72	17.29	34.17	94.85	186.7	26.70	66.34	106.2	145.8	205.4
5 (125)	3(80)	60	13.62	10.81	21.36	59.28	116.7	16.69	41.46	66.37	91.14	128.4
	4(100)		21.80	17.29	34.17	94.85	186.7	26.70	66.34	106.2	145.8	205.4
	5(125)		13.62	27.06	53.40	148.2	291.7	41.72	i03.7	165.9	227.9	320.9
6 (150)	4(100)	60	21.80	17.29	34.17	94.85	186.7	26.70	66.34	106.2	145.8	205.4
	5(125)		13.62	27.06	53.40	148.2	291.7	41.72	103.7	165.9	227.9	320.9
	6(150)		21.80	43.23	65.42	237.1	466.8	66.75	165.85	265.5	364.6	513.5
8 (200)	5(125)	60	13.62	27.06	53.40	148.2	291.7	71.72	103.7	165.9	227.9	320.9
	6(150)		21.80	43.23	85.42	237.1	466.8	66.75	165.85	265.5	364.6	513.5
	8(200)		34.34	68.08	134.5	373.5	735.2	104.7	260.1	416.3	571.7	805.2

阀体、阀内件材质组合及使用温度范围・阀座允许泄漏量
The Material of Valve and Components, Range of Using Temperature・Allowable Leakage of Seat

阀体材质：碳钢 Body Material: Carbon Steel

阀体材质 Body Material		SCPH2/A216-WCB, SCPH21/A217-WC6, SCPL1/A352-LCB		
阀芯 Core	材质 Material	SUS 304/316	SUS 304/316	SUS 304/316
	处理 Treatment	–	R.TFE	SS/SF
阀座 Seat	材质 Material	SUS 304/316	SUS 304/316	SUS 304/316
	处理 Treatment	–	–	SS/SF
导向套 Guide Sleeve	材质 Material	SUS 420	SUS 420	SUS 420
	处理 Treatment	HT	HT	HT
垫圈 Gasket	材质 Material	SUS 316L	SUS 316L	SUS 316L
阀座允许泄漏量 Allowable Leakage of Seat	ANSI	Class IV	Class IV	Class IV
	额定 CvX Rated CvX	0.01%	Bubble-Tight	0.01%
作用温度℃ Operating Temperature	SCPH2/WCB 阀体 SCPH2/WCB Body	-17~+425	-17~+230	-17~+425
	SCPH21/WC6 阀体 SCPH21/WC6 Body	-17~+566	-17~+230	-17~+566
	SCPL1/LCB 阀体 SCPL1/LCB Body	-45~+350	-45~+270	-45~+350

阀体材质：不锈钢 Body Material: Stainless Steel

阀体材质 Body Material		SCS13A/CF8, SCS14A/CF8M, SCS16A/CF3M		
阀芯 Core	材质 Material	SUS 304/316/316L	SUS 304/316	SUS 304/316/316L
	处理 Treatment	–	R.TFE	SS/SF
阀座 Seat	材质 Material	SUS 304/316/316L	SUS 304/316/316L	SUS 304/316/316L
	处理 Treatment	–	–	SS/SF
导向套 Guide Sleeve	材质 Material	SUS 304/316/316L	SUS 304/316/316L	SUS 304/316/316L
	处理 Treatment	–	R.TFE	ST
垫圈 Gasket	材质 Material	SUS 316L	SUS 316L	SUS 316L
阀座允许泄漏量 Allowable Leakage of Seat	ANSI	Class IV	Class IV	Class IV
	额定 CvX Rated CvX	0.01%	Bubble-Tight	0.01%
作用温度℃ Operating Temperature		-196~+566	-45~+230	-196~+566

R.TFE：强化聚四氟乙烯 HT：热处理 ST：堆焊司太立合金 SS：部分堆焊司太立合金 SF：全部堆焊司太立合金
R.TFE: Reinforced PTFE HT: Heat Treatment ST: Surfacing Sitailai Alloy SS: Partial Surfacing Sitailai Alloys SF: All Surfacing Sitailai Alloys

允许压差
Allowable Differential Pressure

多弹簧薄膜式执行机构 Multi-spring Diaphragm Actuator

单位 Unit: MPa

执行机构规格 Actuator Specification	气源压力 Air Pressure KPa	弹簧范围 Spring Range KPa	Inch(mm) 阀芯尺寸 Core Size										
			3/4 20	1 25	1 1/4 32	1 1/2 40	2 50	2 1/2 65	3 80	4 100	5 125	6 150	8 200
ZJHA/B-22	140	20~100	1.17	0.75	–	–	–	–	–	–	–	–	–
	240	40~200	2.73	1.75	–	–	–	–	–	–	–	–	–
	300	80~240	5.85	3.75	–	–	–	–	–	–	–	–	–
ZJHA/B-23	140	20~100	1.64	1.05	0.63	0.4	0.26	–	–	–	–	–	–
	240	40~200	3.82	2.45	1.49	0.96	0.61	–	–	–	–	–	–
	300	80~240	8.19	5.24	3.19	2.05	1.31	–	–	–	–	–	–
ZJHA/B-34	140	20~100	–	–	1.02	0.66	0.42	0.24	0.16	0.10	–	–	–
	240	40~200	–	–	2.38	1.53	0.98	0.58	0.38	0.24	–	–	–
	300	80~240	–	–	5.12	3.28	2.10	1.24	0.82	0.52	–	–	–
ZJHA/B-45	140	20~100	–	–	–	–	–	0.40	0.26	0.17	0.11	0.07	0.02
	240	40~200	–	–	–	–	–	0.93	0.61	0.39	0.25	0.17	0.07
	300	80~240	–	–	–	–	–	1.98	1.32	0.84	0.54	0.37	0.16

电子式执行机构 381L系列 381L Series of Electronic Actuator

单位 Unit: MPa

型号/规格 Model/ Specification	额定电压 Voltage Rating	Inch (mm) 阀芯尺寸 Core Size										
		3/4 20	1 25	1 1/4 32	1 1/2 40	2 50	2 1/2 65	3 80	4 100	5 125	6 150	8 200
381LSA-08	110V 220V 380V	2.38	1.52	0.93	0.59	0.38	–	–	–	–	–	–
		1.91	1.22	0.74	0.47	0.30	–	–	–	–	–	–
381LSA-20		4.77	3.05	1.86	1.19	0.76	0.45	–	–	–	–	–
		3.82	2.44	1.49	0.95	0.61	0.36	–	–	–	–	–
381LSB-30		–	–	2.79	1.79	1.14	0.67	1.21	0.28	0.18	0.12	0.03
		–	–	2.23	1.43	0.91	0.54	0.96	0.22	0.14	0.10	0.02
381LSB-50		–	–	4.66	2.98	1.91	1.13	1.51	0.47	0.30	0.21	0.08
		–	–	3.73	2.38	1.52	0.90	1.20	0.38	0.24	0.16	0.06
381LSB-65		–	–	–	–	–	1.35	2.34	0.57	0.36	0.25	0.11
		–	–	–	–	–	1.08	1.87	0.45	0.29	0.20	0.08
381LSC-99		–	–	–	–	–	2.26	2.92	0.95	0.61	0.42	0.20
		–	–	–	–	–	1.80	2.33	0.76	0.48	0.33	0.15
381LSC-160		–	–	–	–	–	–	–	–	0.97	0.67	0.35
		–	–	–	–	–	–	–	–	0.78	0.54	0.27

外型图 Outline Drawing

3/4"~8"(DN20~DN200)外型
3/4"~8"(DN20~DN200) appearance

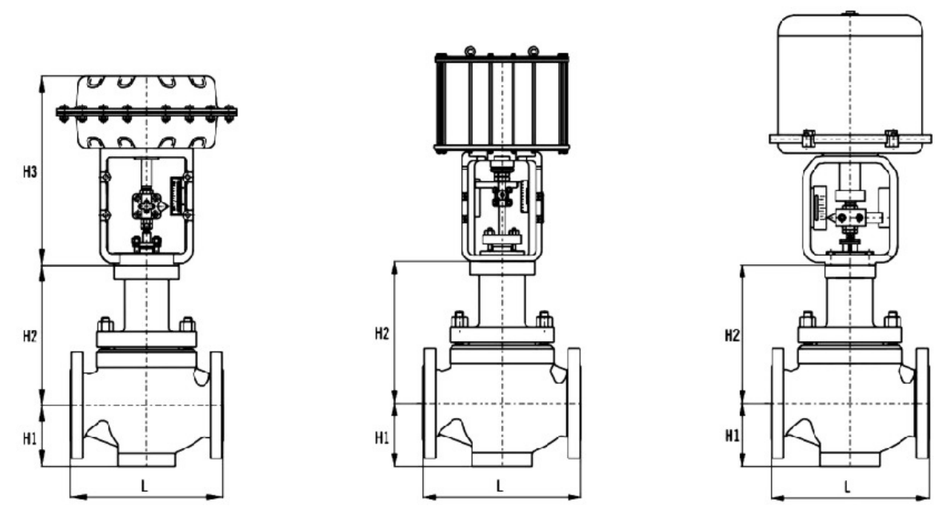

薄膜式 Diaphragm Type　　活塞式 Piston Type　　电动式 Electric Type

外形尺寸 Appearance Dimension

单位 Unit: MPa

DN inch	DN mm	L ANSI 150 PN 16/25 GB/T 12221	L ANSI 150 PN 16/25 GB/T 17213.3	L ANSI 300 PN 40 GB/T 17213.3	L ANSI 600 PN 64/100 GB/T 17213.3	H1	H2	H3	电动执行机构 Electrical Actuator	气动执行机构 Pneuamatic Actuator
3/4	20	150	184	194	206	40	135	274	381LSA-20	ZJHA/B 22
1	25	160	184	197	210	43	146			
1 1/4	32	180	210	235	251	45	163	302	381LSB-30	ZJHA/B 23
1 1/2	40	200	222	235	251	56	163			
2	50	230	254	267	286	73	165			
2 1/2	65	290	276	292	311	83	217	375	381LSB-50	ZJHA/B 34
3	80	310	298	317	337	102	235			
4	100	350	352	368	394	110	236			
5	125	400	402	425	500	146	340	465	381LSC-99	ZJHA/B 45
6	150	480	451	473	508	170	340			
8	200	600	543	568	610	220	383			

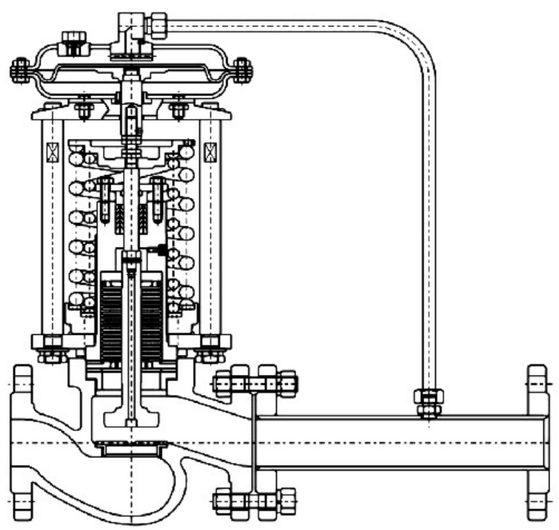

ZZP自力式压力调节阀

ZZP系列调节阀采用外取压结构，能依靠介质自身压力变化达到自动调节和稳定压力的目的，适用于公称通径DN100，P1≤1.0MPa，P2≥15KPa，减压比≤10，≥1.25的液体、蒸汽、非腐蚀性气体及低粘度液体的场合。

该系列分为阀后式ZZYP-B和阀前式ZZYP-K两种。

ZZP Self-operated Pressure Control Va lve

ZZP series control valve adopts external pressure structure, which can automatically adjust and stabilize the pressure depending on the pressure change of the medium itself. It is suitable for liquid, steam, non-corrosive gas and low-viscosity liquid with nominal diameter DN100, P1≤1.0MPa, P2≥15KPa, pressure reduction ratio is ≤10, ≥1.25.

标准规格 Standard Specifications

形式 Manner	流体压力平衡型阀芯 Fluid Pressure Balance Type Trim
公称通径 Nominal diameter	15, 20, 25, 40, 50, 65, 80, 100mm
公称压力 Nominal pressure	ANSI Class 150, 300; JIS 10K, 20K; PN1.6, 4.0MPa*
连接形式 Connection Type	法兰式(JIS B2201-1984、JB/T79.1-94、ANSI B16.5-2009；HG20592-2009、HG20615-2009) Flange Type (JIS B2201-1984、JB/T79.1-94、ANSI B16.5-2009；HG20592-2009、HG20615-2009)
阀内件材质 Trim Material 阀内件处理 Trim Treatment	各种材质组合及适用温度・压力范围 The operating temperature ・ pressure range of various materials combinations
阀体及上阀盖材质 The Material of Body and Bonnet	SCPH2/WCB, SCS13A/CF8, SCS14A/CF8M各种材质的使用温度・压力范围 SCPH2/WCB, SCS13A/CF8, SCS14A/CF8M the operating temperature・pressure range of various materials
填料 Packing	V型聚四氟乙烯填料、石墨 V-type PTFE Packing, Graphite Packing
垫片 Gasket	无石棉橡胶板 Asbestos Free Rubber Sheet

额定Kv值 Rated Kv Value

公称通径 DN Nominal Diameter	15	20	25	32	40	50	65	80	100
额定流量系数(Kv) Rated Flow Cv Value(Kv)	5	7	11	20	30	48	75	120	190
额定行程(mm) Rated Stroke(mm)	8	8	8	10	10	14	20	20	25
压力分段范围(KPa) Range of Pressure Segment(KPa)	15~50, 40~80, 60~100, 80~140, 120~180, 160~220, 200~260, 240~300, 280~350, 300~400, 380~450, 430~500, 480~560, 540~620, 600~700, 680~800, 780~900, 880~1000								

注：额定Kv值也可选用0.12, 0.2, 0.3, 0.5, 0.8, 1.2, 2.0, 3.2
Note: Rated Kv Can Also Choose 0.12, 0.2, 0.3, 0.5, 0.8, 1.2, 2.0, 3.2

执行机构 Actuator

	薄膜式 Diaphragm Type	气缸式 Cylinder Type
	膜片材质 Diaphragm Material	活塞 Piston
	丁腈橡胶 Nitrile Rubber	铝合金 Aluminum Alloy
用途 Use	调节 Regulation	
接口 Connector	M16 × 1.5	
最小压差△p Minimum Differential Pressure	△p≥0.04MPa	
压力调节范围 Pressure Adjustable Range	≤0.5MPa	0.5~1.0MPa
使用温度 Operating Temperature	-5~350℃	
标准涂层色 Standard Coating Color	灰色 Grey	

性能及选型参数表 Performance and Model Selection Parameter Table

公称通径(DN) Nominal diameter		20	25	32	40	50	65	80	100	125	150	200	250	300
额定流量系数(Kv) Rated Flow Cv Value(Kv)		7	11	20	30	48	75	120	190	300	480	760	1100	1750
额定行程(mm) Rated stroke(mm)		8		10		14	20		25	40		50	60	70
公称压力 Nominal pressure		PN16、40、64 Class 150Lb~300Lb												
压力调节范围(KPa) Adjusting range of pressure difference(KPa)		15~50 40~80 60~140 120~220 160~220 200~260 240~300 280~350 330~400 380~450 480~560 540~620 600~700 680~800 780~900 880~1000 950~1500 1000~2500 控制压力尽量选择在调节范围中间值附件 15~50 40~80 60~140 120~220 160~220 200~260 240~300 280~350 330~400 380~450 480~560 540~620 600~700 680~800 780~900 880~1000 950~1500 1000~2500 As for the control pressure, please choose the middle value in the adjustment range as far as possible												
流量特性 Flow characteristic		快开 Quick-opening												
调节精度% Accuracy of adjustmen		±5-10												
使用温度 Operating temperature		-40℃≤不带冷凝器≤200℃≤带冷凝器≤350℃ -40℃≤No condenser≤200℃≤With a condenser≤350℃												
允许泄漏量 Allowable Leakage	硬密封(L/h) Metal to metal	单座：(≤10^{-4}Ⅳ级)；套筒：阀额定容量(≤5×10^{-4}阀额定容量(Ⅱ级) Single seat: (≤10^{-4}Ⅳ Class)；Sleeve: rated valve capacity (≤5×10^{-4} rated valve capacity (Ⅱ class)												
	软密封(L/h) Soft seal	0.15	0.3	0.45	0.6	0.9	1.7	4	6.75	11.1	16			
减压比 Pressure Reducing Ratio	最大 Maximum	10												
	最小 Minmum	1.25												
		阀前压力的最小值 Minimum of upstream pressure												
阀前压力KPa Upstream Pressure		30	50	100	150	200	250	300	350	400				
阀后压力KPa Downstream Pressure		15-24	15-40	15-80	15-120	20-160	25-200	30-240	35-280	40-320				
阀前压力KPa Upstream Pressure		450	500	550	600	650	700	750	800	850				
阀后压力KPa Downstream Pressure		45-360	50-400	55-440	60-480	65-520	170-560	75-600	80-640	85-680				
阀前压力KPa Upstream Pressure		900	950	1000	1250	1500	2000	2500	3000					
阀后压力KPa Downstream Pressure		90-720	95-760	100-800	125-1000	150-1200	200-1600	250-2000	300-2400					

注：规格DN125至DN300压力调节阀根据要求定制。
Note: Customize pressure control valve of DN125 to DN300 on the basis of requirements.

阀体、阀内件材质组合及使用温度范围
The Material of Valve and Components, Range of Using Temperature

阀体材质：碳钢 Body Material: Carbon Steel

阀体材质 Body Material	SCPH2/A216-WCB
阀芯 Core	SUS 304
阀座 Seat	SUS 304
波纹管 Bellows	SUS 304
膜片 Diaphragm	丁腈橡胶 Nitrile rubber
活塞 Piston	铝合金 Aluminum alloy
垫圈 Gasket	无石棉橡胶板 Asbestos free rubber sheet
作用温度℃ Operating Temperature	-5~+350℃

阀体材质：不锈钢 Body Material: Stainless Steel

阀体材质 Body Material	SCS13A/CF8, SCS14A/CF8M
阀芯 Core	SUS 316
阀座 Seat	SUS 316
波纹管 Bellows	SUS 316
膜片 Diaphragm	丁腈橡胶 Nitrile rubber
活塞 Piston	铝合金 Aluminum alloy
垫圈 Gasket	无石棉橡胶板 Asbestos free rubber sheet
作用温度℃ Operating Temperature	-5~+350℃

外型图 Outline Drawing

DN15~DN100 外型
DN15~DN100 appearance

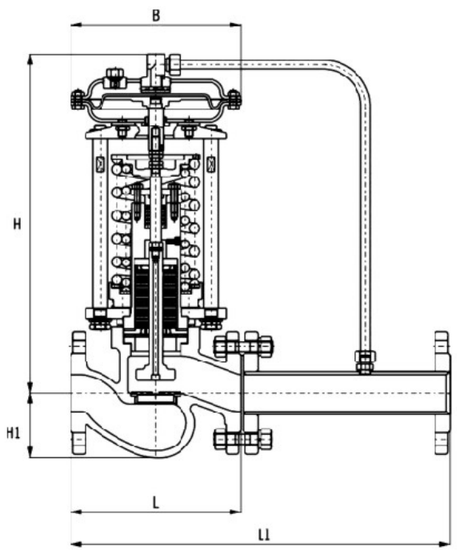

自力式压力调节阀 ZZYP
Self-operated Pressure Control Valve ZZYP

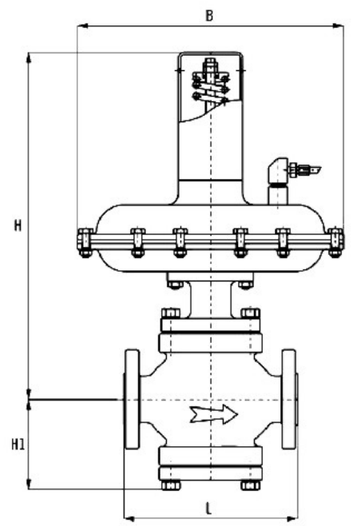

自力式微压调节阀 ZZVP
Self-operated Micropressure Control Valve ZZVP

外形尺寸及重量 Main Outline and Weight

单位 Unit: mm

公称通径(DN) Nominal diameter			15	20	25	32	40	50	65	80	100
法兰接管尺寸(L1) The Size of Flange ConnectionTube			383	383	383	512	512	603	862	862	1023
法兰端间距(L) Flange End Face to Face			150	150	160	180	200	230	290	310	350
H1			32	32	36	58	58	62	75	85	105
压力调节范围 (KPa) Range of Pressure Regulation (KPa)	15-140	H	475	475	475	520	520	540	710	710	780
		B	280	280	280	310	310	310	310	310	310
	120-300	H	455	455	455	500	500	520	690	690	760
		B	195	195	195	230	230	230	230	230	230
	280-500	H	450	450	450	490	490	510	680	680	750
		B	176	176	176	176	176	176	200	200	200
	480-1000	H	445	445	445	480	480	480	670	670	740
		B	176	176	176	176	176	176	200	200	200
重量(~kg) Weight(~kg)			26	26	26	37	37	42	72	90	114
导压管接头螺纹 The Joint Thread of Connecting Pipe			M16 × 1.5								

气动刀型闸阀
Pneumatic Knife Gate Valve

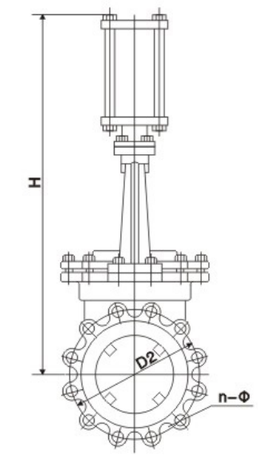

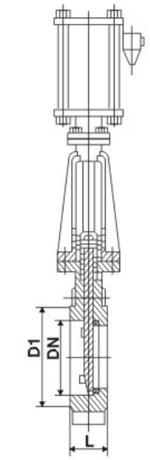

主要外形及连接法兰尺寸 PZ643(H、X、F)-PN6/10(0.6/1.0MPa)

MPa	DN	L	D1	D2	H	n-m	MPa	DN	L	D1	D2	H	n-m
	50	50	90	110	335	4-M12		50	50	100	125	335	4-M16
	65	50	110	130	363	4-M12		65	50	120	145	363	4-M16
	80	50	125	150	395	4-M16		80	50	135	160	395	4-M16
	100	50	145	170	465	4-M16		100	50	155	180	465	8-M16
	125	50	175	200	530	8-M16		125	50	185	210	530	8-M16
	150	60	200	225	630	8-M16		150	60	210	240	630	8-M20
	200	60	255	280	750	8-M16		200	60	265	295	750	8-M20
	250	70	310	335	900	12-M16		250	70	320	350	900	12-M20
	300	80	362	395	1120	12-M20		300	80	368	400	1120	12-M20
0.6	350	90	412	445	1260	12-M20	1.0	350	90	428	460	1260	16-M20
	400	100	462	495	1450	16-M20		400	100	482	515	1450	16-M22
	450	100	518	550	1600	16-M20		450	100	532	565	1600	20-M22
	500	110	568	600	1800	16-M20		500	110	585	620	1800	20-M22
	600	130	670	705	2300	20-M22		600	130	685	725	2300	20-M27
	700	160	775	810	2500	24-M22		700	160	800	840	2500	24-M27
	800	160	880	920	2800	24-M27		800	160	898	950	2800	24-M30
	900	160	980	1020	3100	24-M27		900	160	1005	1050	3100	28-M30
	1000	180	1080	1120	3400	28-M27		1000	180	1115	1160	3400	28-M30
	1200	200	1295	1340	3600	32-M30		1200	200	1325	1380	3600	32-M36

www.wsdsolution.com
www.wsdvalves.com

电动阀门系列
Electric Valve Series

电动法兰球阀
Electric Flange Ball Valve

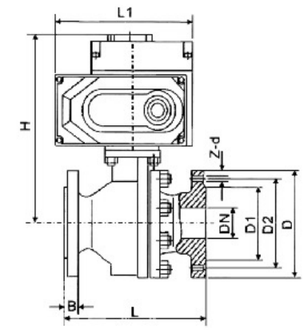

产品概述 Product Overview

电动球阀是一种转角90° 的旋转类球阀，密封性能优良，流通能力大，流阻系数小，结构简单、维修方便、使用寿命长，阀体通道和连接管径相等并成一直径，介质几个可以毫无损失的流过。配用GMT、GMTQT等高性能执行机构，产品通常用于密封要求严格的场合，除控制气体、液体、蒸汽介质外，还适宜控制污水和含有纤维性杂质的介质，广泛用于石油、化工、冶金、轻工、造纸、电站、制冷等工作领域。

An electric ball valve is a kind of rotating type ball valve with rotary angle of 90° and features good sealing performance, large flow capacity, small flow resistance coefficient, simple structure, convenient maintenance and long service life. Valve body passage is equal to connecting pipe diameter in size and medium can almost flow through it with no loss. It is used together with a GMT/GMTQT high performance actuator. Such products are usually used on applications with strict sealing requirements. Besides control of gas, liquid and steam medium, they are also suitable for control of sewage and medium containing fibrous impurities. They are widely used in petroleum, chemical industry, metallurgy, light industry, paper making, power plant, refrigeration, and other work fields.

阀门技术参数 Valve Technical Parameters

公称通径 Nominal diameter (mm)	DN15~DN400(mm)
公称压力 Nominal pressure (MPa)	1.0、1.6、2.5、4.0、6.4MPa
适用介质 Applicable medium	水、石油、硝酸类、醋酸类、粘性流体、浆料、强氧化性介质等。 Water, petroleum, nitric acid, acetic acid, viscous fluid, paste, strong oxidizing medium, etc.
介质温度 Medium temperature	-40℃~+180℃ -40℃~+350℃
泄漏量 Leakage	0符合ANSI B16.104 5级标准
球体转角 Rotating angle of ball	90°
阀体材质 Valve body material	A105、F304、F316、WCB、FZG1Cr18Ni9Ti、ZG1Cr18Ni12Mo2Ti、CF8、CF8M、CF3M
阀座材料 Seat material	聚四氟乙烯(常温)、特制PPL(高温)、金属密封(高温) PTFE (room temperature), special PPL (high temperature), metal seal (high temperature)

主要连接尺寸 Main Connection Dimensions

公称通径 Nominal diameter DN(mm)	尺寸 Size (mm)								执行机构选配(常温常压) Optional actuator (atmospheric pressure and normal pressure)	
	L	D	D2	D1	B	H	L1	Z-d		
15	130	95	65	45	14	176	161	4-14	GMT-005	GMTQT-010
20	140	105	75	55	14	180	161	4-14	GMT-005	GMTQT-010
25	150	115	85	65	14	182	161	4-14	GMT-005	GMTQT-010
32	165	135	100	78	16	188	161	4-18	GMT-010	GMTQT-010
40	180	145	110	85	16	198	161	4-18	GMT-010	GMTQT-010
50	200	160	125	100	16	203	161	4-18	GMT-016	GMTQT-010
65	200	180	145	120	18	222	188	4-18	GMT-016	GMTQT-015
80	250	195	160	135	20	237	188	8-18	GMT-020	GMTQT-020
100	280	215	180	155	20	281	268	8-18	GMT-040	GMTQT-030
125	320	245	210	185	22	300	268	8-18	GMT-060	GMTQT-040
150	360	280	240	210	24	300	268	8-23	GMT-100	GMTQT-080
200	400	335	295	265	26	368	268	12-23	GMT-100	GMTQT-120
250	533	405	335	320	30	418	268	12-25	GMT-200	GMTQT-200

注：以上选配参数仅供参考，具体以实际情况为准。
Note: The above optional parameters are only for reference, Specrfic actual conditions shall prevail.

电动三片式球阀
Electric 3PC Ball Valve

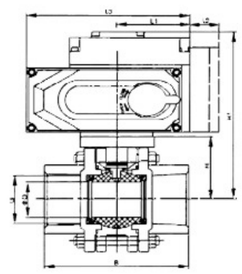

虚线部分为模拟量控制盒，开关型无此尺寸
The dashed part is analog quantity control box;
for type switch, there is no size for this.

产品概述 Product Overview

电动三片式球阀采用一体化结构，与GMT或GMTQT电动执行机构相配，有输入控制信号(4–20mADC或1–5VDC)及单相电源即可控制运转，具有功能强、体积小、轻便易人、性能可能、配套简单、流通能力大、特别适合于介质是粘稠，含颗粒，纤维性质的场合。目前该阀广泛应用于食品、环保、轻工、石油、造纸、化工、教学和科研设备、电力等行业的工业自动控制系统中。

An electric three–piece ball valve adopts an integration structure. It is used together wrth a GMT or GMTQT electric actuator. After inputting control signals (4–20 mADC or 1–5 VDC) and single phase power supply, it can control operation. With powerful function, small size, light weight, reliable performance, simple configuration, large flow capacity, it is especially suitable for applications having viscous medium, partides and fibers. At present, this valve is widely used in industrial automatic control systems of food, environmental protection, light industry, petroleum, paper making, chemical industry, teaching and scientific research equipment and electric power industry.

阀门技术参数 Valve Technical Parameters

公称通径 Nominal diameter (mm)		DN10~100mm		公称压力 Nominal pressure	PN1.6 2.5 4.0 6.4 31.5MPa(定制)		
连接方式 Connection method		内螺纹连接 Female connection			对焊连接 Butt welding		
零件名称 Part name	阀体、阀盖 Valve body, cover	WCB	CF8(304)	CF8M(316)	WCB	CF8(304)	CF8M(316)
	球体、阀杆 Ball body, valve stem	2Cr13	0Cr19Ni9	0Cr17Ni12Mo2	2Cr13	0Cr19Ni9	0Cr17Ni12Mo2
	密封圈、填料 Sealing ring, packing	增强聚四氟乙烯、对位聚苯 Enhanced PTFE, PPL					
适用工况 The suitable operating mode	适用介质 Applicable medium	水、蒸汽、油品等 Water, steam, oil etc.	硝酸等腐蚀性介质 Corrosive medium, like nitric acid	硝酸等腐蚀性介质 Acetic acid and other corrosive medium	水、蒸汽、油品等 Water, steam, oil etc.	硝酸等腐蚀性介质 Corrosive medium, like nitric acid	硝酸等腐蚀性介质 Acetic acid and other corrosive medium
	适用温度 Suitable temperature	–29℃~+180℃(增强聚四氟乙烯 Enhanced PTFE)、–29℃~300℃(对位聚苯 PPL)					

主要连接尺寸 Main Connection Dimensions

G	ΦD	B	H1	H	L1	L2	L3	执行机构选配 Optional actuator	
1/4"	11.2	60	148	42	50	40	123	SZ–005	SZQT–10
3/8"	12.5	60	148	42	50	40	123	GMT–005	GMTQT–010
1/2"	15	72	148	42	50	40	123	GMT–005	GMTQT–010
3/4"	20	82	148	48.5	50	40	123	GMT–010	GMTQT–010
1"	25	90	164	58.5	50	40	123	GMT–010	GMTQT–010
1¹/₄"	32	112	184	63	65	40	160	GMT–016	GMTQT–010
1¹/₂"	38	120	195	71	65	40	160	GMT–016	GMTQT–015
2"	50	145	197.1	78	82	40	189	GMT–020	GMTQT–020
2¹/₂"	65	185	222.5	100	82	40	189	GMT–040	GMTQT–030
3"	76	210	233	109	82	40	189	GMT–060	GMTQT–040
4"	100	268	241	140	116	40	266	GMT–100	GMTQT–080

注：以上选配参数仅供参考，具体以实际情况为准。
Note: The above optional parameters are only for reference. Specrfic actual conditions shall prevail.

电动中线蝶阀
Electric Centerline Butterfly Valve

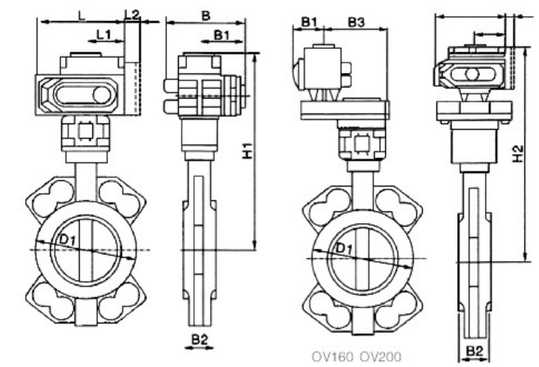

安装尺寸(单位: mm) (虚线部分为模拟量控制盒，开关型无此尺寸)
Installation size (Units: mm) (The dashed part is analog quantity control box;
for type switch, there is no size for this).

产品概述 Product Overview

电动中线蝶阀是由蝶阀与GMT或GMTQT系列执行机构配套，输入控制信号(4~20mA或1~5VDC)及单相电源即可控制运转，电动蝶阀具有功能强、体积小、轻便宜人，性能可靠、配套简单、流通能力大，电动蝶阀特别是适合于介质是粘稠、含颗粒、纤维性质的场合。目前该电动调节蝶阀广泛应用于食品、环保、轻工、石油、造纸、化工、教学和科研设备、电力等行业的工业自动控制系统中。

An electric centerline–type butterfly valve is used together with a GMT or GMTQT series actuator. After inputting control signals (4–20mA or 1–5 VDC) and single phase power supply, it can control operation. With powerful function, small size, light weight, reliable performance, simple configuration, large flow capacity, it is especially suitable for applications having viscous medium, particles and fibers. At present, this valve is widely used in industrial automatic control systems of food, environmental protection, light industry, petroleum, paper making, chemical industry, teaching and scientific research equipment and electric power industry.

阀体 Body

公称通径：50~400mm
公称压力：PN1.0、1.6、2.5MPa
连接形式：对夹式连接，法兰式连接
材　　料：HT200 ZG251 ZG1Cr18Ni9 ZG0Cr17Ni12Mo2 衬四氟
介质温度：常温型：–20℃~+200℃ 散热型：–40℃~+450℃
适用介质：淡水、海水、食品、天然气、醇类、盐类、酸、碱、油、蒸汽、空气等

Nominal diameter: 50–400mm
Nominal pressure: PN1.0, 1.6, 2.5MPa
Connection type: Double–clip type connection, flange connection
Material: HT200 ZG251 ZG1Cr18Ni9 ZG0Cr17Ni12Mo2 PTFE lined
Medium temperature: Room temperature type: –20℃~+200℃
Heat dissipation type: –40℃~+450℃
Applicable medium: Fresh water, sea water, food, natural gas, alcohol, salt, acid, alkali, oil, vapor, air, etc.

密封适用介质，温度推荐表 Application of medium temperature sealing, recommendation form

	密封副材质 Seal material	适用温度 Suitable temperature	介质类型及适用程度 Medium type and applicability													突出特性 Outstanding features
			淡水 Fresh water	海水 Sea water	盐类 Salt	强碱 Strong alkali	弱碱 Alkali	强酸 Acid	弱酸 Weak acid	天然气 Natural gas	醇类 Alcohol	空气 Air	蒸汽 Vapor	油类 Oil	食品 Food	
阀座 Seat	丁腈 Nitrile	–12℃~+85℃	A	A	A	B	A	D	B	A	C	A	D	A	B	耐油 Oil resistant
	三元乙丙 Epdm	–35℃~+135℃	A	A	A	A	A	C	A	B	B	A	A	C	A	耐老化 Resistance to aging
	耐腐蚀三元乙丙 Corrosion resistant epdm	–35℃~+160℃	A	A	A	A	A	A	A	B	B	A	A	C	A	耐腐蚀、耐老化 Corrosion resistance, ageing resistance
	氟橡胶 Fluorine rubber	–23℃~+135℃	A	A	A	C	A	C	A	A	C	A	A	A	A	耐高温、耐腐蚀 High temperature resistant, corrosion resistant
	聚四氟乙烯 PTFE	–10℃~+150℃	A	A	A	A	A	A	A	A	A	A	A	A	A	耐腐蚀、耐高温 corrosion resistant, high temperature resistance
蝶板 Butterfly plate	球铁电镀 Ductile iron electroplating	–30℃~+350℃	B	D	C	D	C	D	C	B	A	B	A	A	C	耐热 Heat resistant
	球铁尼龙覆层 Ductile iron nylon coating	–30℃~+100℃	A	A	A	A	A	D	A	A	C	A	D	A	A	抗蚀、耐磨、减摩 Corrosion resistance, wear resistance and anti friction
	铝青铜 Aluminum bronze	–273℃~+232℃	A	B	C	D	C	D	B	A	A	A	A	A	C	耐热、耐腐蚀 Heat resistance, corrosion resistance
	不锈钢 Stainless steel	–273℃~+316℃	A	B	C	C	B	C	A	A	A	A	A	A	A	耐高温、耐腐蚀 High temperature resistant, corrosion resistant

A非常适用 A very suitable　B适用 Applicable to B　C有限适用 C limited application　D不适用 D is not applicable to

阀内组件可选材料 The inner valve assembly optional material

主要零部件 Main parts	材质 Material	适用规格 Applicable Size	主要零部件 Main parts	材质 Material	适用规格 Applicable Size
阀体 Body	球墨铸铁 Nodular cast iron 灰铸铁 Gray cast iron 铸钢 Cast steel 不锈钢 Stainless steel	50mm~ 300mm 50mm~ 300mm 50mm~ 300mm 50mm~ 300mm	阀杆 Stem	不锈钢 Stainless Steel 416 不锈钢 Stainless Steel 316 不锈钢 Stainless Steel 304 碳钢镀镍磷 Nickd-phosphate plating for carbon steel	50mm~ 300mm 50mm~ 300mm 50mm~ 300mm 50mm~ 300mm
阀板 Disc	不锈钢 Stainless Steel CF8 不锈钢 Stainless Steel CF8M 球墨铸铁镀镍磷 Nickel-phosphate plating for ductile iron 球墨铸铁覆尼龙 Nylon coating for ductile iron 铝青铜 Aluminum bronze	50mm~ 300mm 50mm~ 300mm 50mm~ 300mm 50mm~ 300mm 50mm~ 300mm	阀座 Seat	乙丙橡胶 EPDM Ethylene propylene rubber 氟橡胶 VITON Fluorine rubber 硅橡胶 SEP Silicone rubber 耐热 EPDM Heat resistant 耐磨 EPDM Wear resistant	50mm~ 300mm 50mm~ 300mm 50mm~ 300mm 50mm~ 300mm 50mm~ 300mm 50mm~ 300mm

主要连接尺寸 Main connection dimensions

通径 Diameter	L	L1	L2	B	B1	B2	H2	D1	执行机构选配(常温常压) Optional actuator (atmospheric pressure and normal pressure)	
50	161	71.5	40	120.5	62	42.6	297	92	GMT-005	GMTQT-010
65	161	71.5	40	120.5	62	45.6	310	106	GMT-005	GMTQT-010
80	161	71.5	40	120.5	62	45.6	331	122	GMT-010	GMTQT-010
100	188	71.5	40	120.5	62	51.6	348	150	GMT-010	GMTQT-010
125	268	81	40	165	75	55.6	428	177	GMT-016	GMTQT-010
150	268	117	40	268	119	55.6	447	204	GMT-020	GMTQT-020
200	268	117	40	268	119	59.6	481	260	GMT-040	GMTQT-040
250	268	117	40	268	119	67.6	520	314	GMT-060	GMTQT-060
300	268	117	40	268	119	77.6	548	370	GMT-080	GMTQT-080
350	268	117	40	268	119	79	583	422	GMT-100	GMTQT-120
400	268	117	40	268	119	105	615	473	GMT-200	GMTQT-200

注：以上选配参数仅供参考，具体以实际情况为准。
Note: The above optional parameters are only for reference, Specrfic actual conditions shall prevail.

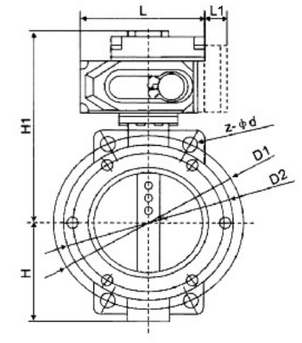

产品概述 Product overview

采用精密的U形弹性密封圈和三偏心多层次金属硬密封结构，被广泛用于介质温度≤425℃的冶金、电力、石油化工、以及给排水和市政建设等工业管道上，作调节流量和截断流体使用。该阀采用三偏心结构，阀座与蝶板密封面均采用铸钢和不锈钢制作，具有良好的耐腐蚀性，使用寿命长，本阀均有双向密封功能，产品符合国家GB/T13927-92阀门压力试验标准。

It uses precision U-shaped elastic sealing ring and triple eccentric multi-level metal hard sealed structure. It is widely used in ndustrial pipelines with medium temperature≤425℃ in metallurgy, electric power, petrochemical industry, water supply and drainage, and municipal construction, to adjust flow rate and cut off fluid. Triple eccentnc structure is used in the valve.Sealing surfaces of the valve seat and butterfly plate are made of cast steel and stainless steel. With good corrosion resistance, it has a long service life. This valve has the two-way sealing function. The product complies with GB/T13927-92 valve pressure test standard.

阀门技术参数 Valve technical parameters

公称通径 Nominal diameter(mm)		50~600		
公称压力 Nominal pressure(MPa)		1.0		1.6
公称压力 Nominal pressure (MPa)	强度试验 Strength test	1.5		2.4
	密封试验 Sealing test	1.1		4.76
材料/材料代号 Material/material code		C	P	R
主要零件 Main parts	阀体 Body	WCB	ZG1Cr18Ni9Ti	ZG0Cr18Ni12Mo2Ti
	蝶板 Butterfly plate	WCB	ZG1Cr18Ni9Ti	ZG0Cr18Ni12Mo2Ti
	阀杆 Stem	2Cr13	1Cr18Ni9Ti	0Cr18Ni12Mo2Ti
	密封圈 Sealing ring	四氟、不锈钢 High temperature, Stainless steel		
	填料 Packing	四氟、柔性石墨 High temperature, Flexible graphite		
适用工况 The suitable operating mode	适用介质 Applicable medium	水、蒸汽、油品 Water, steam, oil	硝酸类 Nitrate class	醋酸类 Acetic acid class
	适用温度 Suitable temperature	碳钢 Carbon steel: -29℃+425℃ 不锈钢 Stainless steel: -40℃~+600℃		

主要连接尺寸 Main connection dimensions

公称通径 Nominal diameter		外形尺寸 Dimension size			连接尺寸 Connection size						执行机构选配 Optional actuator	
					PN1.0MPa			PN1.6MPa				
毫米 mm	英寸 in	L	H1	H	D2	D1	ZΦ-d	D2	D1	ZΦ-d		
50	2	161	215	85	82	125	4-18	82	125	4-18	GMT-005	GMTQT-010
65	2 1/2	188	280	90	95	145	4-18	95	145	4-18	GMT-010	GMTQT-010
80	3	188	285	100	108	160	4-18	108	160	4-18	GMT-016	GMTQT-015
100	4	268	310	120	125	180	4-18	125	180	4-18	GMT-020	GMTQT-020
125	5	268	310	130	138	210	4-18	138	210	4-18	GMT-020	GMTQT-030
150	6	268	315	160	198	240	4-22	198	240	4-22	GMT-040	GMTQT-040
200	8	268	380	210	236	295	4-22	236	295	4-22	GMT-060	GMTQT-060
250	10	268	460	250	276	355	4-22	276	355	4-26	GMT-100	GMTQT-080
300	12	268	475	250	300	410	4-22	308	410	4-26	GMT-160	GMTQT-120
350	14	268	510	320	332	470	4-22	340	470	4-26	GMT-200	GMTQT-200

注：以上选配参数仅供参考，具体以实际情况为准。
Note: The above optional parameters are only for reference, Specrfic actual conditions shall prevail.

简单介绍 Brief introduction

法兰气动角座阀以316不锈钢为主要制造材质，广泛用于啤酒，纺织印染和漂白，制药及医疗设备，食品加工，橡胶机械，有机和无机化工，清洗消毒高温灭菌，水处理等行业，适用于介质为水，液体，中性气体，水蒸汽，轻微腐蚀性气体及液体，与电磁阀及其他阀门相比，具有投资经济，使用安全，免维护，寿命长的特点。

Flange type pneumatic angle seat valve is mainly made of 316 stainless steel. It is widely used in beer, textile printing and dyeing and bleaching, pharmaceutical and medical equipment, food processing, rubber machinery, organic and inorganic chemical industry, cleaning and disinfection and high-temperature sterilization, water treatment and other industries. It is applicable to media like water, liquid, neutral gas, water vapor, slightly corrosive gas and liquid. Compared with solenoid valves and other valves, it features economic investment, safe use, maintenance-free and long service life.

法兰气动角座阀的详细介绍 Detailed introduction to flange type pneumatic angle seat valve

与传统角座阀相比，它具有以下新特点--法兰气动角座阀：

1、可视位置指示：可接限位开关或紧急手动装置。
2、容易安装：气动头可旋转360°，可方便地安装一到二个限位开关。
3、先进的气动控制器：加厚工程塑料外壳，安全可靠。低磨损的活塞结构，容量大而低耗气量。内部元件自润滑，免维护。
4、具有多种控制方式：常开、常闭、双动。
5、要求更小的气动执行器：流体从阀杆上方流入时，可选更小的控制头。
6、容易连接：MAMUR标准连接，嵌入式金属接头。
7、长寿命导杆：阀杆契形特氟隆（PTEE）密封，避免脏物导入。自润滑，免维护。阀杆经特别处理以确保最佳固定，并能自动校正位置。
8、无水锤作用. 流体从阀杆下方菠入时，水锤（水冲击力）被吸收。
9、先进的阀体机构：流量比普通角座大30%，体积更小，流体流态更优。不锈钢316阀体，特氟隆密封，耐高温，耐腐蚀。寿命高达七百万次。

Compared with the traditional angle seat valve, flange type pnaumatic angle seat valve has the following new features:
1. Visual position indicabon: Able to be connected to limit switch or emergency manual device.
2. Easy-to-install: Pneumatic head can rotate by 360°. It is easy to install one or two limit switches.
3. Advanced pneumatic controller: With thickened engineering plastics shell, safe and reliable; low-wear piston structure, large capacity and low volume; internal elements are self-lubricating and maintenance-free.
4. Having a variety of control modes: Normally open, normally closed, double-acting.
5. Requiring smaller pneumatic actuators:When fluid flows in from the above of the valve stem, a smaller control head can be selected.
6. Easy-to-connect: MAMUR standard connection, embedded metal joint.
7. Guide rod with long service life: Valve rod uses a wedged Teflon (PTEE) seal to avoid incoming dirt. Self-lubricating and maintenance-free; the valve rod experiences special treatment to ensure the best fixation and it can make automatic position correction.
8. No water hammer: When fluid flows in from the underneath of valve rod, the water hammer (water impact) is absorbed.
9. Advanced valve body mechanism: Its flow is 30% larger than that of common angle seat; it has smaller volume and better fluid flow state. 316 stainless steel body, teflon sealing, high temperature resistance, corrosion resistance. Its service life is as high as seven million times.

法兰气动角座阀 数据表格 Flange type pneumatic angle seat valve-Data Sheet

接口 Interface	内孔 mm Inner hole	执行机械 mm Perform mechanical	A	B	C	E	F	H	A/F
G1/2	13	50	85	173	12	64	44	137	27
G3/4	20	50	95	178	12	64	44	145	32
G1	25	63	105	212	14	80	52	173	41
G1 1/4	32	63	120	255	16	101	60	210	50
G1 1/2	40	63	130	301	18	127	73	260	55
G2	50	63	150	346	20	153	86	301	70
G2 1/2	65	80	185	372	22	153	86	315	70

POLOVO气动角座阀参数 Parameters for POLOVO pneumatic angle seat valve

接口 Interface 英寸 inches	内孔 mm Inner hole	KV值 m^3/h	最大工作压力(bar) Maximum working pressure	要求最小气源压力(bar) Required minimum air pressure(bar)	执行机构尺寸 mm Actuator size	流向 Flow
G3/8	13	3.7	0-16	4.0	40	阀座上方 Above of valve seat
G1/2	13	4.2	0-16	2.7	50	阀座上方 Above of valve seat
G3/4	20	8.0	0-16	2.7	50	阀座上方 Above of valve seat
G1	25	19.0	0-16	2.0	63	阀座上方 Above of valve seat
G1 1/4	32	27.5	0-16	2.0	63	阀座上方 Above of valve seat
G1 1/2	40	42.0	0-16	2.0	63	阀座上方 Above of valve seat
G2	50	52.0	0-16	2.0	63	阀座上方 Above of valve seat
G2 1/2	65	77.0	0-14	1.6	80	阀座上方 Above of valve seat

气动角座阀
Pneumatic Angle Seat Valve

设计 Design
控制方式A：常闭型
Control mode: A normally closed type

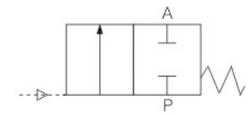

控制方式B：双作用
Control mode: B double role

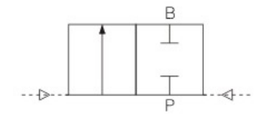

POLOVO气动角座阀外形尺寸图 Overall dimensions of POLOVO pneumatic angle seat valve

接口 Interface	内孔 Inner hole	L	D	B	H	最大压力 Maximum pressure	气源压力 Air pressure	执行器规格 Actuator specifications
G1/2	15	120	95	135	150	1.6MPa	0.4-0.7bar	50
G3/4	20	130	105	135	160			50
G1	25	140	115	135	185			63
G1 1/4	32	150	135	135	255			63
G1 1/2	40	180	145	170	340			80
G2	50	195	160	180	380			80
G2 1/2	65	230	180	190	450			100
G3	80	255	195	230	480			125

安装 Installation

安装位置：任意 Installation location: Optional

- 在阀体外侧所附的箭头代表介质流动的方向，安装时请遵循安装过程；
- 连接阀门到管道，确保阀体所附箭头与流体方一致。
- 焊接式阀门安装：焊接时请先将执行器卸离阀体。
- 螺纹式阀门安装：可按照用户要求提前卸离或不需卸离执行器。
- The arrow attached on the outside of valve body represents the medium flowing direction. During installation, please follow the installation process:
- Connect the valve to the pipeline, to ensure that arrow attached on the valve body is consistent with fluid flowing direction.
- Welded type valve installation: During welding, the actuator shall be first removed from the valve body.
- Threaded type valve installation: Remove the actuator in advance or don't need to remove the actuator according to the user's requirements.

拆卸 Disassembly

- 拆卸前首先确保对阀门的气压作用已经解除。
- 安装前需要卸下阀体时，避免用力过大，轻卸。
- 拆卸后，保护好螺纹、密封面及密封垫。
- 安装好阀体后，装执行器部分时，注意别漏装密封垫。
- 安装后，检测阀体与执行器密封是否完好。确保无泄露，方可使用。
- Prior to disassembly, ensure pressure effect on the valve has been released.
- When it is needed to remove the valve body before the installation, avoid overexertion and remove it slightly.
- After disassembly, protect threads, sealing surfaces and gaskets.
- When installing the actuator after the valve body is installed, be careful not to neglect sealing gaskets.
- After installation, check whether the valve and actuator are well sealed. It can be only used after ensuring no leakage.

法兰气动角座阀
Flange type pneumatic angle seat valve

不锈钢头丝扣角座阀
Stainless steel head thread angle seat valve

快装气动角座阀
Fast-assembling pneumatic angle seat valve

气动卫生级角座阀
Pneumatic sanitary angle seat valve